TEST METHOD 51

OVERSPEED TEST

(SET)

51.1 General. Since possible surging speeds during operation may injure personnel or destroy the equipment, there must be assurance that rotating parts are in balance.

51.2 Apparatus. A frequency meter or tachometer, as described in EGSA 107T, Test Method 4 or Test Method 9, shall be required.

51.3 Procedure.

51.3.1 Preparation for test.

a. Connect the frequency meter or tachometer or utilize the tachometer in accordance with the manufacturer's instructions.

b. Disconnect, or otherwise render inoperative, any overspeed protection devices, if necessary.

51.3.2 Test.

a. Start and operate the set at rated voltage, rated frequency (speed) and at no load.

b. By operating the throttle lever, or by any other satisfactory means, bring the speed up slowly from rated speed to the overspeed specified in the contract.

c. With the generator operating without load, adjust the terminal voltage, if possible, to approximately rated value. The voltmeter on the set control panel is adequate to indicate the voltage for this method.

d. Maintain the overspeed for the specified time duration and record the time of overspeed operation.

e. Record any evidence of excessive noise or increased vibration.

f. After completion of this test, reconnect any overspeed protection devices, if necessary.

51.4 Results. Any evidence of excessive noise or increased vibration shall require disassembly and inspection to determine the cause.

51.5 Contract requirements. The following items must be specified in the individual contract.

a. The overspeed at which this method is to be performed.

b. The time duration that the set is required to operate at the overspeed condition.

TEST METHOD 52

OVERSPEED PROTECTIVE DEVICE TEST

52.1 General. To assure that adequate protection is afforded the generator set against overspeeding, the overspeed protective device must operate properly.

52.2 Apparatus. A frequency meter or tachometer as described in EGSA 107T, Test Method 4 or Test Method 9 shall be required.

52.3 Procedure.

52.3.1 Preparation for test. Connect the frequency meter or tachometer in accordance with the manufacturer's instructions. If the set is provided with an electronic governor or throttle stops, it may be necessary to deactivate these devices.

52.3.2 Test.

a. Start and operate the generator set at rated speed (frequency), rated voltage and no load.

b. Slowly increase the engine speed until the overspeed protective device actuates. Record the speed of the generator set at this point, and the malfunction indicator light indication, if applicable.

CAUTION: Do not operate the set in excess of 125 percent of rated speed or as otherwise limited in the contract.

c. If the set is equipped with a manual reset provision for the overspeed protective device, attempt to start the set. Record if starting is achieved. If the set did not start, reset the overspeed protective device.

d. Repeat steps a thru c above two additional times.

52.4 Results. The speed at which the overspeed protective device actuated shall be compared with the limits specified in the contract.

52.5 Contract requirements. The following details must be specified in the individual contract:

a. Speed conditions at which the overspeed protective device shall actuate.

b. Overspeed malfunction indicator requirements, if applicable.

c. Manual reset requirements, if applicable.

TEST METHOD 53

OVERSPEED TEST
(GENERATOR ONLY)

53.1 General. Unbalanced rotating assemblies during possible surging speeds may injure personnel, or damage or destroy the equipment; there must be assurance that rotating parts are properly balanced.

53.2 Apparatus. A voltmeter and frequency meter or tachometer as described in EGSA 107T, Test Methods 1 and 4 or 9 shall be required. A variable speed prime mover capable of driving the generator at the specified overspeed at no load, and an external dc source for excitation shall also be required.

53.3 Procedure.

53.3.1 Preparation for test.

a. Mechanically connect the generator to the prime mover and connect the external excitation supply to the generator.

b. Connect the voltmeter to any suitable terminals of the generator.

c. Connect the frequency meter or utilize the tachometer in accordance with the manufacturer's instructions.

53.3.2 Test.

a. Start and operate the prime mover so that the generator is operating at rated frequency (speed), and adjust the external excitation supply to produce rated voltage.

b. By operating the prime mover controls, increase the speed of the generator slowly from rated to the specified overspeed.

c. With the generator operating without load, adjust the coil voltage to approximately rated voltage, if necessary.

d. Maintain the overspeed condition for 15 minutes or for the time interval specified in the contract. Record any indications of increased vibration or noise.

e. Stop the prime mover and generator, and visually inspect the generator for evidence of destruction, injury or noticeable change to any part.

53.4 Results. Any evidence of increased noise or vibration or any evidence of destruction, injury or noticeable change in any part after shutdown shall be recorded on the data sheet.

505.3.5 Contract requirements. The following items must be specified in the individual contract:

a. The speed at which this method shall be performed.

b. The time duration that the generator is required to operate at the overspeed condition, if other than 15 minutes.

TEST METHOD 54

UNDERSPEED PROTECTIVE DEVICE TEST

54.1 General. The underspeed protective device protects both the generator and the load against a speed (frequency) that is below acceptable limits. Operating a generator set at a speed that is below design limits can cause excessive field currents, inability to carry rated load, and damage to frequency sensitive loads such as motors, motor operated equipment, and transformers.

54.2 Apparatus. Load instrumentation shall be as described in EGSA 107T

54.3 Procedure.

54.3.1 Preparation for test. Connect the load instrumentation for one voltage connection and frequency specified in the contract.

54.3.2 Test.

a. Start and operate the set at rated voltage and rated speed at no load.

b. Close the circuit interrupter.

c. Slowly decrease the speed from rated, recording the speed at which the underspeed protective device causes the circuit interrupter to open. If the set is equipped with a low frequency (speed) malfunction indicator, record its indication.

d. Return the speed to rated and apply rated load.

e. Slowly decrease the speed from rated and record the speed at which the underspeed protective device causes the circuit interrupter to open. If the set is equipped with a low frequency (speed) malfunction indicator, record its indication.

f. Attempt to reclose the circuit interrupter with the set at this underspeed condition and record if circuit interrupter actuation was possible.

g. If the generator set is equipped with an electric type underspeed protective device repeat steps a thru f above with the set operating at the maximum and minimum specified voltage operating range limits.

h. Repeat steps a thru g above for any other rated speed specified in the requirement document.

54.4 Results. The underspeed protective device actuation shall be compared with the requirements specified in the contract.

54.5 Contract requirements. The following items must be specified in the individual contract:

a. The voltage connection(s) at which this method shall be performed.

b. The speed at which the underspeed protective device shall actuate for each frequency condition.

c. The frequency(ies) at which this method shall be performed.

d. The voltage operating limits, if applicable.

e. Circuit interrupter non-closure requirements at underspeed conditions.

f. Malfunction indicator requirements, if applicable.

TEST METHOD 55

PHASE SEQUENCE TEST (ROTATION)

55.1 General. Unless the phase sequence (rotation) of the load terminals of a three-phase generator set is correct, serious damage or injury could be done to connected equipment and to personnel as a result of reversed motor rotation or excessive current surges.

55.2 Apparatus. A phase sequence (rotation) indicator as described in EGSA 107T, Test Method 6 or a three-phase motor whose direction of operation in relation to phase sequence is known shall be required.

55.3 Procedure.

a. Connect the generator set load terminals to the applicable test apparatus for one of the set three-phase voltage connections. Recheck the connections to insure that L1, L2, and L3 of the generator set are connected to L1, L2, and L3 of the test apparatus respectively.

b. Start and operate the generator set at rated voltage and frequency. The set indicating instruments shall be sufficient indication of output voltage and frequency.

c. Close the circuit interrupter and determine the direction of phase sequence (rotation) by observing the indicator, or by noting the direction of rotation if a three-phase motor is used. Record results

d. Check the phase sequence (rotation) of the power output of each power receptacle on the generator set by connecting the applicable test apparatus to that receptacle and repeating steps a thru c above.

e. Repeat steps a thru d above for all other three-phase voltage output connections of the generator set.

55.4 Results. The phase sequence (rotation) as indicated by the test shall be checked against the set wiring diagram and the requirements of the contract.

55.5 Contract requirements. The following detail must be specified in the contract:

a. Phase sequence (rotation).

TEST METHOD 56

PHASE BALANCE TEST
(VOLTAGE)

56.1 General. Polyphase electrical equipment may not operate properly or may be damaged if the phase voltages of a polyphase generator differ greatly from each other. Also, large differences between the phase voltages of a polyphase generator may be an indication that the generator set has been improperly manufactured or damaged.

56.2 Apparatus. A frequency meter (or tachometer) as described in EGSA 107T, Test Method 4 (or Test Method 9) and a rms indicating dc voltmeter having an accuracy of ±0.1 percent of the reading (or better) shall be required to perform both procedures. If load is required in procedure I, instrumentation for measuring load conditions shall be as described in EGSA 107T. A means of separately exciting the generator will be required if 56.3.2, procedure II, is performed.

56.3 Procedure.

56.3.1 Procedure I. (Generator with Exciter and Voltage Regulator)

56.3.1.1 Preparation for test.

a. Connect the generator set for one of the voltage connections and frequencies specified in the contract.

b. Connect the frequency meter to the generator output.

c. The same voltmeter shall be used to measure all ac output voltages.

56.3.1.2 Test.

a. Start and operate the generator set at no load.

b. Adjust a regulated phase voltage (line-to-neutral) to rated voltage.

c. Read and record the generator frequency, all line-to-neutral voltages, and all line-to-line voltages.

d. Repeat steps a thru c above at each of the other voltage connections and frequencies specified in the requirement.

e. If additional load conditions, other than no load, are specified in the requirement document, repeat steps a thru d above for all specified load conditions maintaining balanced loads (both resistive and reactive).

56.3.2 Procedure II. (Generator with separate excitation).

56.3.2.1 Preparation for test.

a. Completely isolate the generator windings (armature coils and field winding).

b. Connect the frequency meter to one of the armature coils of the generator.

c. Provide separate excitation for the generator. For generators with static exciters, excite the generator field; for brushless energize the exciter field.

56.3.2.2 Test.

a. Start and operate the generator at one of its rated frequencies (speeds) and at no load.

b. Adjust the excitation so that any one of the coil voltages is at rated value.

c. Read and record the generator frequency (speed) and the voltage of each armature coil (see figure 56-I).

d. Repeat steps a thru c above for any other specified frequency.

56.4 Results.

56.4.1 Generator with exciter and voltage regulator: (procedure I).

a. From the data obtained in 56.3.1.2, determine the maximum and minimum line-to neutral voltages for one voltage, frequency and load condition.

b. Line-to-neutral voltage unbalance, in %, is the difference between the maximum voltage (V max) and minimum voltage (V min) determined in step a above divided by the rated line-to-neutral voltage (V rated) (at the voltage connection used) and multiplied by 100.

$$\text{Voltage Unbalance (L-N) , in percent} = \frac{V\ max - V\ min}{V\ rated} \times 100$$

c. Repeat steps a and b above substituting line-to-line voltages for line-to-neutral voltages.

d. Repeat steps a thru c above for each voltage connection, frequency and load condition.

e. Compare the results of steps b thru d above with the requirements of the requirement document.

56.4.2 Generator with separate excitation: (Procedure II)

a. Determine from the data obtained in 56.3.2.2, the maximum and minimum armature coil voltages.

b. The voltage unbalance is the difference between the maximum armature coil voltage (V max) and minimum armature coil voltage (V min). To express this in percent divide this difference by rated armature coil voltage (V rated) and multiply by 100.

$$\text{Voltage Unbalance (Coil), in percent} = \frac{\text{V max - V min}}{\text{V rated}} \times 100$$

c. Repeat steps a and b above for any other specified frequency.

d. Compare the results of steps b and c above with the requirements of the requirement document.

56.5 Contract requirements. The following items must be specified in the individual contract:

a. Requirement as to whether the procedure of 56.3.1 or 56.3.2 or both shall be performed.

56.5.1 Procedure I.

a. Maximum allowable line-to-neutral voltage unbalance, in percent of rated line-to-neutral voltage.

b. Maximum allowable individual line-to-line voltage unbalance, in percent of rated line-to-line voltage, if required.

c. Load conditions if other than no load at which this method is to be performed.

d. Voltage connection(s) and frequency(ies) at which this method is to be performed.

56.5.2 Procedure II.

a. Maximum allowable individual armature coil voltage unbalance in percent of rated armature coil voltage or maximum allowable voltage difference between armature coils.

b. Frequency(ies) at which this method is to be performed.

TEST METHOD 57

CIRCULATING CURRENT TEST

57.1 General. Excessive circulating current will shorten the useful life of the generator.

57.2 Apparatus. Instrumentation for measuring voltage, current, and frequency shall be as described in EGSA 107T.

57.3 Procedure.

57.3.1 Preparation for test.

a. Connect the voltage and frequency instrumentation to measure all line-to-line and line-to-neutral voltages.

b. Connect the necessary ammeters, for the applicable voltage and winding configuration, in accordance with figure 57-I.

57.3.2 Test.

a. Start and operate the generator set at rated voltage, rated frequency, and at no load.

b. Record all instrument readings (see figure 57-II).

57.4 Results. Compare the results with the requirements of the contract.

57.5 Contract requirements. The following items must be specified in the individual contract:

a. Voltage connection(s) and frequency(ies) at which this method is to be performed.

b. Allowable circulating currents.

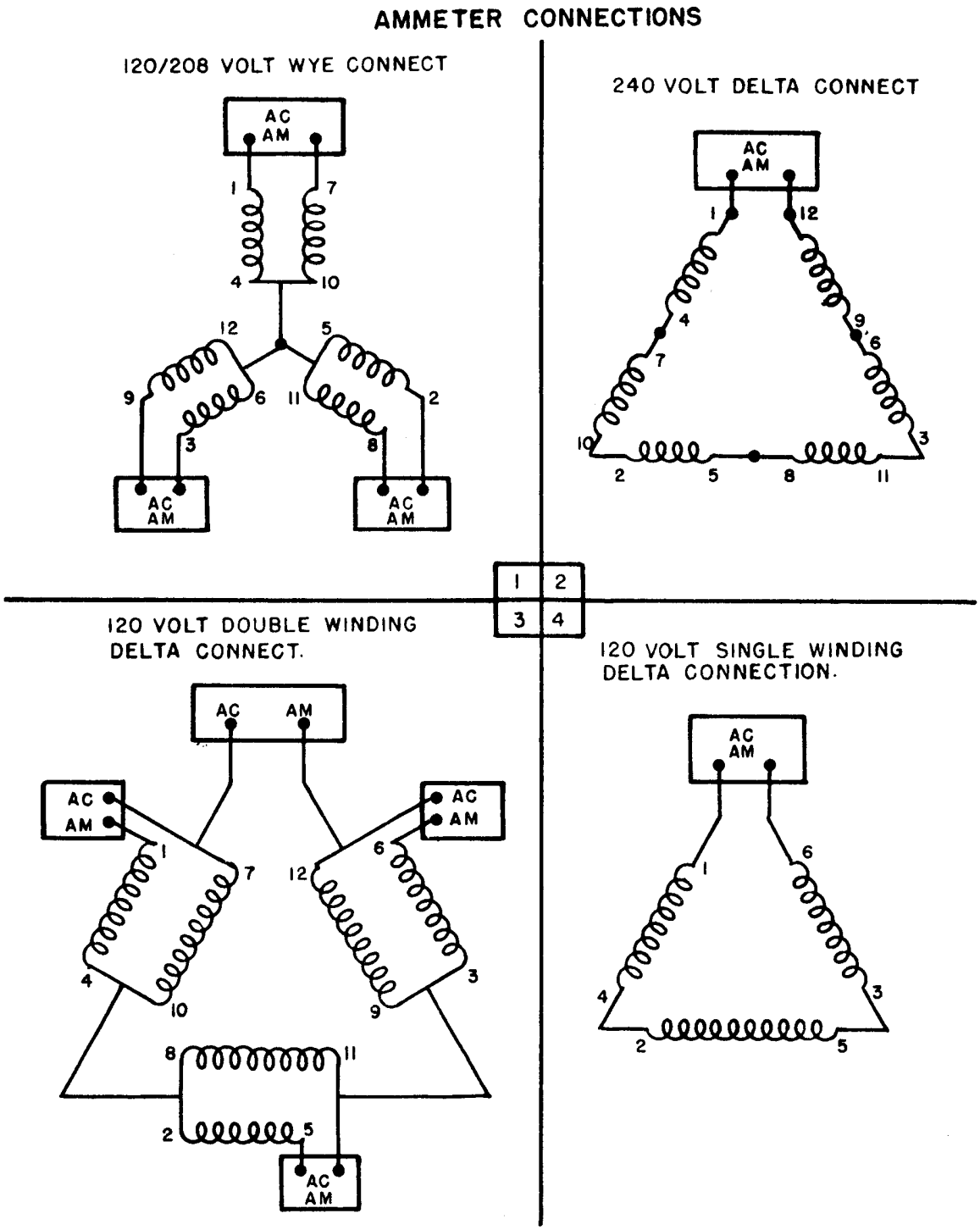

FIRGURE 57-I. APPARATUS HOOKUP FOR CIRCULATING CURRENT TEST.

TEST METHOD 58

RHEOSTAT RANGE TEST

58.1 General. The manual field or manual control rheostat provided with the generator set must have adjustment capable of varying the excitation to compensate for the inherent voltage regulation of the generator. It must also be capable of providing an operating voltage other than rated voltage for special types of equipment and it must be capable of compensating for voltage drop on the distribution system.

58.2 Apparatus. Instrumentation for measuring load conditions and ambient temperature shall be as described in EGSA 107T . Electrical instrumentation used for this test shall have an accuracy of ±0.5 percent of reading or better.

58.3 Procedure.

58.3.1 Preparation for test.

a. Connect the load instrumentation for one voltage connection and frequency specified in the contract.

b. Render the voltage regulator inoperative by positioning the 'manual-automatic voltage regulation selector switch" at the "MANUAL" position.

58.3.2 Test.

58.3.2.1 No load.

a. Start and operate the generator set at rated speed.

b. Adjust the manual field rheostat such that the terminal voltage is at the minimum specified voltage at no load. Record all instrument readings.

c. Adjust the manual field rheostat such that the terminal voltage is at the maximum specified voltage at no load. Record all instrument readings.

58.3.2.2 Rated load.

a. With the generator set operating at no load adjust the manual field rheostat such that the terminal voltage is at the minimum specified voltage.

b. Increase the load, adjust the voltage, speed and load until the set is operating at rated load, rated speed and at the minimum specified voltage. Record all instrument readings (see figure 58-I).

NOTE: At this point the set will be carrying greater than rated current.

c. Reduce the voltage to the minimum possible value using the manual field rheostat. Next, remove the load.

d. With the generator operating at no load, adjust the manual field rheostat such that the terminal voltage is at the maximum specified voltage.

e. Increase the load, adjust the voltage, speed and load until the set is operating at rated load, rated speed and at the maximum specified voltage. Record all instrument readings.

NOTE: At this point the set will be carrying less than rated current.

f. Reduce the voltage to the minimum possible value using the manual field rheostat. Next remove the load.

CAUTION: The voltage must be reduced prior to removing the load to avoid possible high voltages that will damage the set and the apparatus.

58.4 Results. Compare the recorded results with the requirements of the contract.

58.5 Contract requirements. The following items must be specified in the individual contract.

a. The voltage connection(s) and frequency(ies) at which this method is to be performed.

b. The maximum and minimum voltages for each voltage connection and frequency.

TEST METHOD 59

REGULATOR RANGE TEST

59.1 General. The voltage adjust device associated with the voltage regulator provided with the generator set must have adjustment capable of varying the regulated voltage throughout the limits and under the various load conditions and temperature ranges without causing the voltage droop of the set to exceed specification limits. The voltage adjust device also must be capable in some cases of providing an operating voltage other than rated voltage for special types of equipment and to compensate for external line drop.

NOTE: The Regulator Range Test is required by the Indicating Instrument Test (Test Method 64). If Test Method 64 is to be performed, a separate regulator range test is not required.

59.2 Apparatus. Instrumentation for measuring load conditions, ambient temperature shall be as described in EGSA 107T . Electrical instrumentation for this test shall have an accuracy of ±0.5 percent of reading or better.

511.1.3 Procedure.

511.1.3.1 Preparation for the test.

a. Connect the load and field instrumentation for the voltage connection and frequency specified in the contract.

b. By-pass the circuit interrupter, if necessary, except on sets equipped with overvoltage and undervoltage protection devices.

59.3.2 Test.

a. Start and operate the generator set and allow the set to stabilize at rated load, rated voltage and rated frequency. During this period record all instrument readings including thermal instrumentation at minimum intervals of 10 minutes. If necessary, adjustments to the load, voltage and frequency may be made to maintain rated load at rated voltage and frequency. Adjustments to the voltage and frequency shall be limited to those adjustments available to the operator, specifically adjustments to the voltage or frequency adjust devices. On sets utilizing a droop-type speed control system as the prime speed control, the speed and droop portions of the control may be adjusted. No other adjustments to the voltage and frequency control systems shall be made unless permitted by the contract. Adjustments to load, voltage or frequency controls shall be recorded on the data sheet at the time of adjustment.

Unless otherwise specified in the contract, stabilization shall be considered to have occurred when four consecutive voltage and frequency recorded readings of the generator line output either remain unchanged or have only minor variations within plus or minus one-half the long-term stability bandwidth with no evident continued increase or decrease in value after the last adjustment to the load, voltage or frequency has been made. If this test is performed immediately following another test which has established stabilization values, stabilization will be considered valid once all the previously established values and operating parameters are obtained. (Initial stabilization readings therefore must include all values needed for subsequent testing).

NOTE: Operation of the set must not be interrupted between this test and the test that established stabilization values.

b. No further adjustments shall be made to any set control for the remainder of this test except the control panel voltage adjust device.

c. Record all instrument readings (figure 59-I).

d. Remove load.

e. Record all instrument readings (after transients have subsided).

f. Adjust the terminal voltage to the maximum specified value.

g. Record all instrument readings.

NOTE: At voltages above rated values, the generator will be supplying less than rated current; and at voltages below rated values, the generator will be supplying greater than rated current. Caution should be taken to avoid damage to instrumentation and load banks.

h. Apply rated load (rated kW at rated power factor).

i. Record all instrument readings (after transients have subsided).

j. Remove load and adjust voltage to the maximum attainable value or to a value just prior to actuation of the overvoltage protection device. (The voltage adjust device should be at the mechanical stop or end of rotation).

k. Record all instrument readings (after transients have subsided).

l. Apply rated load (rated kW at rated power factor).

m. Record all instrument readings (after transients have subsided).

n. Adjust voltage to the minimum specified value at rated load (rated kW at rated power factor).

o. Record all instrument readings (after transients have subsided).

p. Remove load.

q. Record all instrument readings (after transients have subsided).

r. Adjust voltage to the minimum attainable value or the value just prior to activation of the undervoltage protection device. (The device should be at the mechanical stop or end of rotation).

s. Record all instrument readings (after transients have subsided).

t. Repeat steps a thru s above for any other voltage connection(s) and frequency(ies) specified in the contract.

59.4 Results. The data sheets shall indicate the voltage regulation as a percent of rated voltage within the specified limits at the minimum and maximum specified voltages and the regulation as a percent of rated voltage at the extremes, the maximum and minimum voltages attainable and the actuation of the protection devices (if applicable) . Compare these results with the requirements of the contract.

511.1.4.1 Sample calculations. Voltage regulation (droop) expressed in percent, is defined for the purposes of this method as the no-load value minus the rated load value divided by the rated load value.

$$\text{Percent Regulation} = \frac{(\text{No-Load Voltage}) - (\text{Rated-Load Voltage})}{(\text{Rated-Load Voltage})} \times 100$$

511.1.5 Contract requirements. The following items must be specified in the individual contract:

a. Maximum and minimum voltages between which the generator set shall perform.

b. The maximum allowable regulation (droop).

c. The voltage connection(s) and frequency(ies) at which this method is to be performed.

d. Load conditions at which this method is to be performed, if other than those specified herein.

e. Minimum and maximum voltage adjustments, if applicable.

TEST METHOD 60

FREQUENCY ADJUSTMENT RANGE TEST

60.1 General. It is necessary that the frequency of a generator set be adjustable to provide rated frequency at various load conditions as required in certain applications and to synchronize two or more generators for parallel operation.

60.2 Apparatus. Instrumentation for measuring load conditions and ambient temperature shall be as described in EGSA 107T .

60.3 Procedure.

60.3.1 Preparation for test. Connect the load and field instrumentation in accordance with the for the voltage connection and frequency specified in the contract.

60.3.2 Test.

a. Start and operate the generator set at one of the voltage connections and frequencies specified in the contract and allow it to stabilize at rated load, rated voltage and rated frequency During this period, readings of the load and field instrumentation shall be recorded at minimum intervals of 10 minutes. If necessary, adjustments to the load, voltage and frequency may be made to maintain rated load at rated voltage and rated frequency. However, adjustments to the voltage and frequency shall be limited to those adjustments available to the operator, specifically adjustments to voltage and frequency adjust devices. On sets utilizing a droop-type speed control system as the prime speed control, the speed and droop portions of the control may be adjusted. No other adjustments to the voltage and frequency control systems shall be made unless permitted by the contract. Adjustments to the load, voltage or frequency shall be noted on the data sheet at the time of adjustment. Unless otherwise specified in the contract, stabilization shall be considered to have occurred when four consecutive voltage and frequency recorded readings of the generator line output either remain unchanged or have only minor variations within plus or minus one-half the long-term stability bandwidth with no evident continued increase or decrease in value after the last adjustment to the load, voltage or frequency has been made. If this test is performed immediately following another test which has established stabilization values, stabilization will be considered valid once all the previously established values and operating parameters are obtained. (Initial stabilization readings therefore must include all values needed for subsequent testing).

NOTE: Operation of the set must not be interrupted between this test and the test that established stabilization values.

b. No further adjustments shall be made to any set control for the remainder of this test except for the control panel frequency adjust device.

c. For each of the conditions in the following steps allow approximately 2 minutes between each adjustment and the subsequent instrument readings.

d. Adjust the generator set frequency for the specified maximum frequency at rated load. Read and record all instrument readings.

e. Adjust the generator set frequency for the specified minimum frequency at rated load. Read and record all instrument readings.

f. Reduce the load to zero.

g. Slowly adjust the generator set frequency control for the maximum attainable frequency. Read and record all instrument readings. During this adjustment carefully observe the frequency meter and record the frequency at which the overspeed device alarms and actuates, if so equipped.

Note: Maximum attainable frequency adjustments are not applicable to generator sets that utilize a threaded shaft and lock nut(s) or other mechanical means as a method of operator speed adjustment.

h. Slowly adjust the generator set frequency control for the minimum attainable frequency. Read and record all instrument readings. On sets with protection devices, read and record all readings just prior to point of actuation if the underfrequency or underspeed protection device actuates. Record on the data sheet whether the protection device actuated.

Note: Minimum attainable frequency adjustments are not applicable to generator sets that utilize a threaded shaft and lock nut(s) or other mechanical means as a method of operator speed adjustment.

i. Repeat 60.3.1 and 60.3.2 a thru h for each frequency specified in the requirement document.

60.4 Results. The data sheet shall show the maximum and minimum frequencies attained at rated load, the maximum and minimum attainable frequencies at no load and actuation of the protection devices (if applicable). Compare these results with the requirements of the contract.

60.5 Contract requirements. The following items must be specified in the individual contract:

a. Maximum frequency adjustment(s).

b. Minimum frequency adjustment(s).

c. Generator set voltage connection(s) and frequency(ies) at which this method is to be performed.

d. Load conditions at which this method is to be performed if other than those specified herein.

e. Protective device actuation requirements.