TEST METHOD 41

DIRECT-AXIS TRANSIENT REACTANCE TEST

41.1 General. The direct-axis transient reactance is used by design engineers to determine the ability of the generator to absorb sudden load applications without having the voltage drop below acceptable levels for using equipment. It gives an indication of the motor starting capabilities of the generator.

41.2 Apparatus. Instrumentation for measuring load conditions, field voltage and current shall be as described in EGSA 107T (unless otherwise specified in the required document). In addition, the test recording equipment shall be described in EGSA 107T, Test Methods 1, 4, and 6, a non-inductive shunt, a timing wave source, a short circuiting switch, a separate variable dc source for generator excitation and a prime mover capable of maintaining the generator speed within ±1 percent of rated speed under all load conditions of this method shall be required. Electrical instrumentation for this test shall have an accuracy of ±0.5 percent of reading or better.

41.3 Procedure.

41.3.1 Preparation for test.

a. Mechanically connect the prime mover to the generator and provide the external excitation supply to the generator.

b. Connect the instrumentation and shorting switch to the generator in accordance with figure 41-I for the voltage connection and frequency specified in the requirement document.

   NOTE: Care shall be taken to reduce the impedance of the current-carrying leads and contacts to a minimum. The leads shall be as short as possible and the conductors for the various phases as close together as practicable to reduce the inductance. These precautions are especially important when dealing with frequencies above 60 Hz.

c. Operate the generator at rated speed and adjust the field current to produce rated voltage at the generator terminals at no load.

d. Adjust the test recording equipment such that the no load voltage trace has a minimum amplitude of 2 inches peak-to-peak. Close the shorting switch and adjust the traces such that the sustained short-circuit current trace has a minimum amplitude of 3/4 inch peak-to-peak.

e. Adjust the test recording equipment such that successive peaks are separated by a minimum of 1/8 inch.

f. After these adjustments have been made, open the shorting switch.

41.3.2 Test.

a. Start and operate the prime mover such that the generator is at rated speed. Adjust the external excitation supply to produce rated voltage at the generator terminals with no load.

b. Record all instrument readings (see figure 41-II).

c. Operate the test recording equipment. Allow sufficient time to record the zero position of the current trace, the open circuit voltage, and the timing wave.

d. Close the short-circuiting switch. Allow the test recording equipment to record the transient and sustained short-circuit current and voltage.

e. Record all instrument readings when sustained short-circuit conditions are achieved.

f. Repeat steps a thru e two additional times.

NOTE: For a polyphase generator, it is permissible to record the short-circuit current in one phase only.

41.4 Results.

a. Working directly with the charts or stored waveforms, start with the first peak in the current wave following the application of the short-circuit, and number this peak "1" (see figure 41-III). Number subsequent peaks consecutively until steady-state conditions occur.

b. Draw a curve through the even numbered peaks and another through the odd numbered peaks. These two curves are called the "envelope".

c. Construct straight lines from each peak to a point on the opposite half of the envelope which is 1/2 the horizontal distance between the preceding and the following peaks on the opposite side of the zero axis.

d. Starting at the first peak that can be identified (either peak no. 1 or peak no. 2), measure (in millimeters or other comparable units) the distance between envelope lines along the lines just constructed. Prepare a table of these distances (see figure 41-IV).

e. Measure the perpendicular distance between envelope lines at steady-state and enter this into the table prepared in step d above. Steady-state is determined by the envelope lines (they are parallel at steady-state).

f. Subtract the steady-state distance from each of the other distances to obtain the fourth column of the table.

g. Using semi-log graph paper (or plotted using automated equipment) with the linear axis labeled "peaks" and the log axis labeled "millimeters" (or the unit used in measuring the distances in steps d and e above), plot each of the distances obtained in the fourth column.

h. Draw a smooth curve through the points ignoring obvious measurement errors. This curve is identified as "Curve A" in figure 41-V.

i. Extend the straight line portion of "Curve A" to the edge of the paper. This extension is identified as "Curve B" in figure 41-V.

j. From the charts or stored waveforms measure the distance along the zero axis between the "t = 0" line (the point at which the short circuit was applied) and the line drawn from the no. 2 peak. Enter this distance on the work sheet. In the example, the distance was found to be 7.0 millimeters.

k. Measure the distance along the zero axis between the lines drawn from no. 2 and no. 4 peaks. Enter this distance on the work sheet. In the example, the distance was found to be 11.5 millimeters.

l. Divide the measurement obtained in j by the measurement obtained in k to obtain the ratio between the two distances. In the example, this ratio is 0.61.

m. On the graph (or using automated equipment), plot a point to the left of the no. 2 peak position, representing the ratio obtained in step 1 multiplied by the distance between 2 and 0 on the semi-log paper (or plotted using automated equipment). In figure 41-V this distance is 6.1 squares to the left of the no. 2 peak position. Draw a perpendicular line through this point and extending through "Curve B". This line represents t = 0.

n. Determine the reading at the point where "Curve B" intersects the t = 0 line. In the example, this reading is 18.5 millimeters. m is value is substituted for $i_t = 0$ in the following formula:

$$X'_d = \frac{I_{RATED}}{(I_{t=o} + i_{SS})\ \frac{I_{SS}}{i_{SS}}}$$

i_{SS} is the distance perpendicular to the zero axis of the oscillogram between peaks at steady-state. In the example, i_{SS}=25 millimeters.

I_{SS} is the ammeter reading obtained from the data sheet.

In the example, I_{SS}=64.5 amperes.

I_{RATED} is the rated current of the generator phase under test.

In the example, I_{RATED}= 17.34 amperes.

X'_d is the direct axis transient reactance. In the example, X'_d 0.154 per unit or 15.4 percent.

o. Repeat para 41.3.3 for each chart or stored waveform taken in para 41.3.2. The value of the direct axis transient reactance shall be the average of the several computed values.

p. Compare the computed value of the direct axis transient reactance with the requirements of the contract.

41.5 Contract requirements. The following items must be specified in the individual contract:

a. Voltage connection(s) and frequency(ies) at which this method is to be performed.

b. Maximum allowable direct axis transient reactance (X'_d), at rated voltage expressed in per unit or percent.

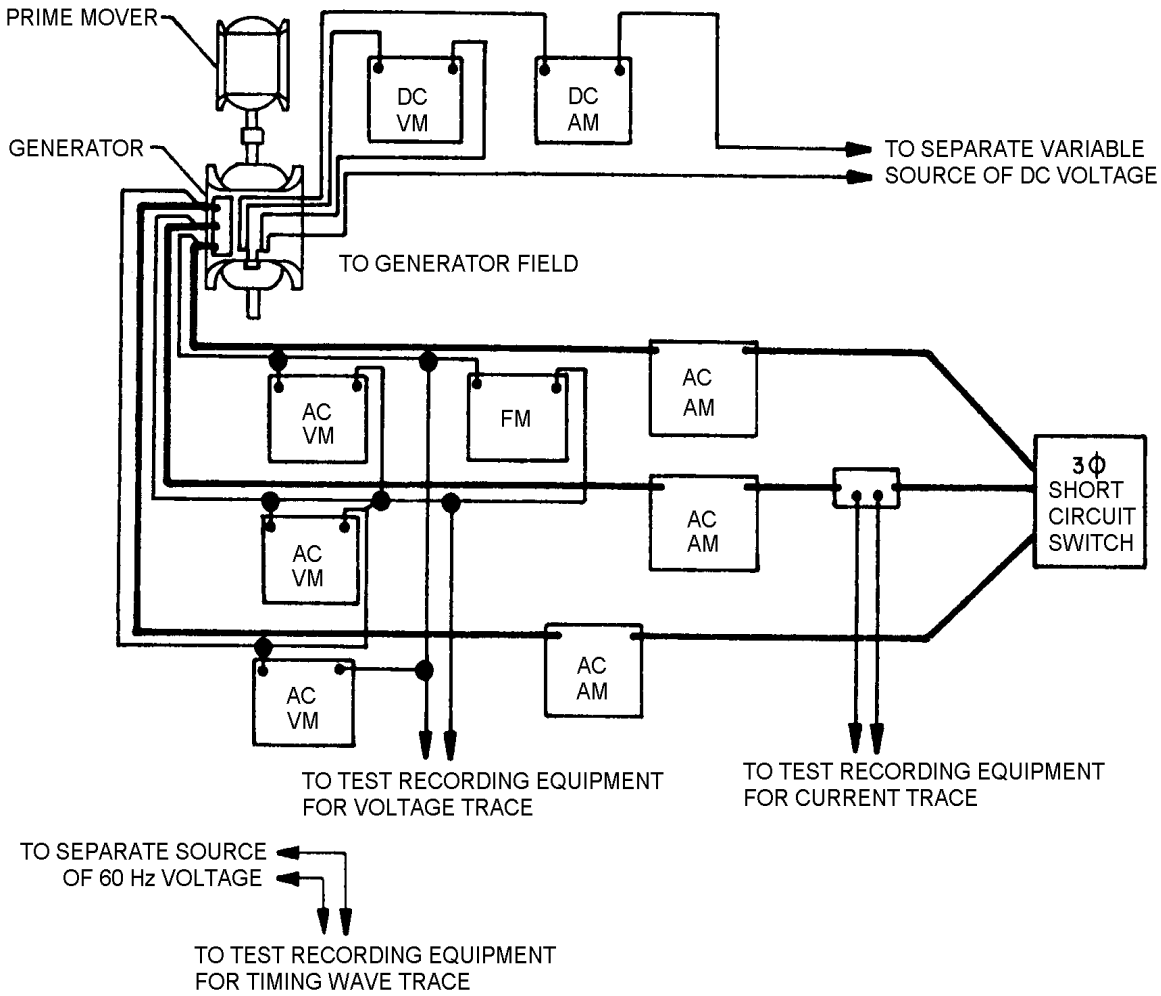

FIGURE 41-I Typical apparatus hookup for direct-axis transient reactance test.

SIMULATED DATA FOR ILLUSTRATIVE PURPOSE ONLY

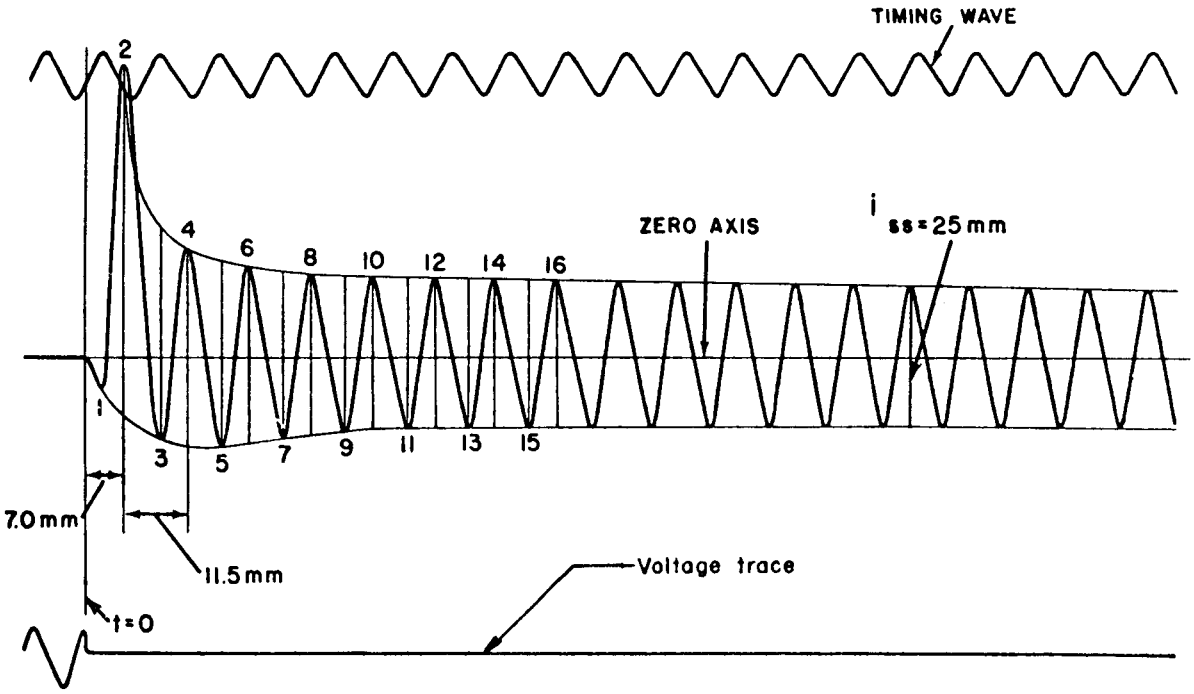

FIGURE 41-III. Sample chart for direct-axis transient reactance test.

SIMULATED DATA FOR ILLUSTRATIVE PURPOSE ONLY

PEAK NO.	LENGTH MM	ISS LENGTH MM	COL (2) – COL (3)
(1)	(2)	(3)	(4)
1		25	
2	63.5	25	38.5
3	40.5	25	15.5
4	35	25	10
5	33	25	8
6	31.5	25	6.5
7	30	25	5
8	29.5	25	4.5
9	28.5	25	3.5
10	28	25	3
11	27.4	25	2.4
12	27	25	2
13	26.5	25	1.5
14	26.5	25	1.5
15	26.5	25	1.5
16	26.5	25	1.5

$$x'_d = \frac{I_{rated}}{\left(i_{t=0} + i_{ss}\right)\frac{I_{ss}}{i_{ss}}}$$

t=0 to peak 2 = 7.0 mm

peak 2 to peak 4 = 11.5 mm

$$\frac{7}{11.5} = 0.61$$

$i_{t=0}$ = 18.5 mm

i_{ss} = 25 mm

I_{ss} = 64.5 amperes

I_{rated} = 17.34 amperes

THEREFORE

$$x'_d = \frac{17.34}{(18.5 + 25)\ \frac{64.5}{25}}$$

$$x'_d = \frac{17.34}{43.5\left(\frac{64.5}{25}\right)}$$

$$x'_d = \frac{17.34}{43.5\,(2.58)}$$

$$x'_d = \frac{17.34}{112.23}$$

x'_d = 0.154 or 15.4% reactance

FIGURE 41-IV. Sample worksheet for direct-axis transient reactance test.

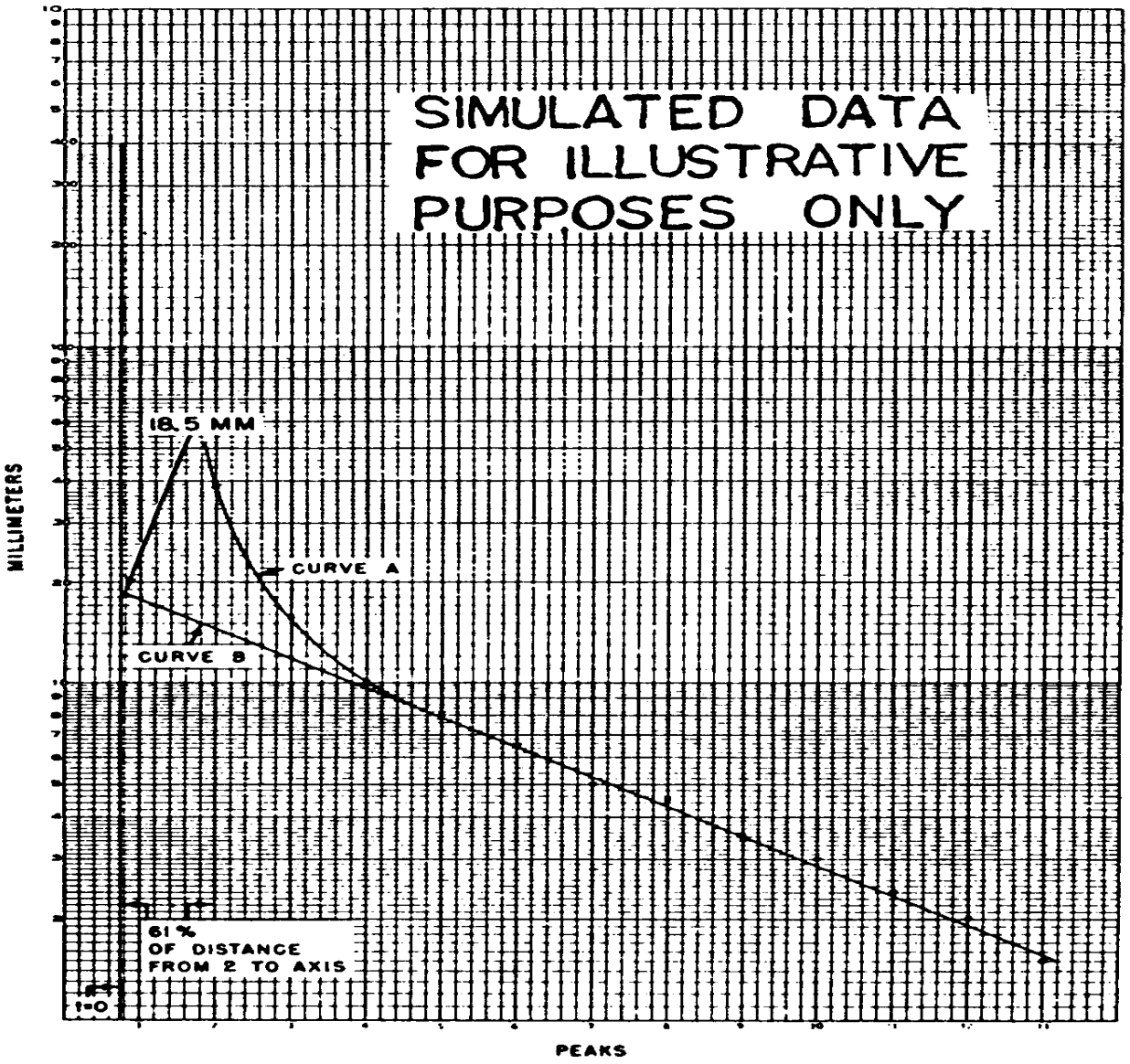

FIGURE 41-V. Sample curve used in the determination of direct-axis transient reactance.

TEST METHOD 42

DIRECT-AXIS SUBTRANSIENT REACTANCE TEST

42.1 General. The direct-axis sub-transient reactance is used by design engineers to determine the necessary interrupting capacity of the set circuit interrupter.

42.2 Apparatus. Instrumentation for measuring load conditions, field voltage and current shall be as described in EGSA 107T . In addition, the test recording equipment shall be described in EGSA 107T , Test Method 1,4,and 6, a non-inductive shunt, a timing wave source, a short circuiting switch, a separate, variable dc source for generator excitation and a prime mover capable of maintaining the generator speed within ±1 percent of rated speed under all load conditions of this method shall be required. Electrical instrumentation for this test shall have an accuracy of ±0.5 percent of reading or better.

42.3 Procedure.

a. Perform Test Method 41, Direct-Axis Transient Reactance Test.

b. On the same graph as plotted for Test Method 41, plot an additional line as shown in figure 42-I. The procedure for plotting this line is as follows:

   1. Ascertain the scale distance between the straight line (Curve "B") and the curved line (Curve "A") for at least three peak positions.

   2. Plot these distances on the respective peak lines. In the example, Curve "A" is 24 mm from Curve "B" on the No. 2 peak perpendicular. Similarly, at the 2.6 peak, the scale distance between the two curves is 7.5 mm. At the No. 3 peak, the distance is 3.5 mm.

   3. Draw a straight line through these points. In the example, this line is identified as Curve "C".

c. Read the value in mm (or the unit used in measuring the distances in step b above) where the Curve "C" crosses the t = 0 line. In the example, this crossing is at 264 mm.

d. Using the following formula compute the direct-axis subtransient reactance, X''_d

$$X''_d \text{ (in percent)} = \frac{I_{RATED}}{\dfrac{(i'_{t=0}\, i_{t=0} + i_{ss})\, I_{ss}}{i_{ss}}} \times 100$$

Where: $i'_{t=0}$ is the point where Curve "C" crosses the t=0 line (in the example $i'_{t=0}$=264 mm).

$i_{t=0}$ is the point where Curve "B" crosses the t=0 line.

i_{ss} is the distance perpendicular to the zero axis of the chart (or stored waveforms) between peaks at steady-state.

I_{ss} is the ammeter reading obtained from the data sheet taken in method 41.

I_{RATED} is the rated current of the generator under test.

e. The above procedure shall be applied to the short-circuit current in all phases of a polyphase generator when they have been recorded on charts or stored as waveforms, or to the three individual charts or stored waveforms taken on one phase. The value of X''_d for the generator shall be the average of the several computed values.

42.4 Results. Compare the average value of the subtransient reactance (X''_d) with the requirements of the contract.

42.5 Contract requirements. The following items must be specified in the individual contract:

a. Maximum minimum or range of allowable values of the direct-axis subtransient reactance (X''_d), at rated voltage, expressed as a percent.

b. Voltage connection(s) and frequency(ies) at which this method is to be performed.

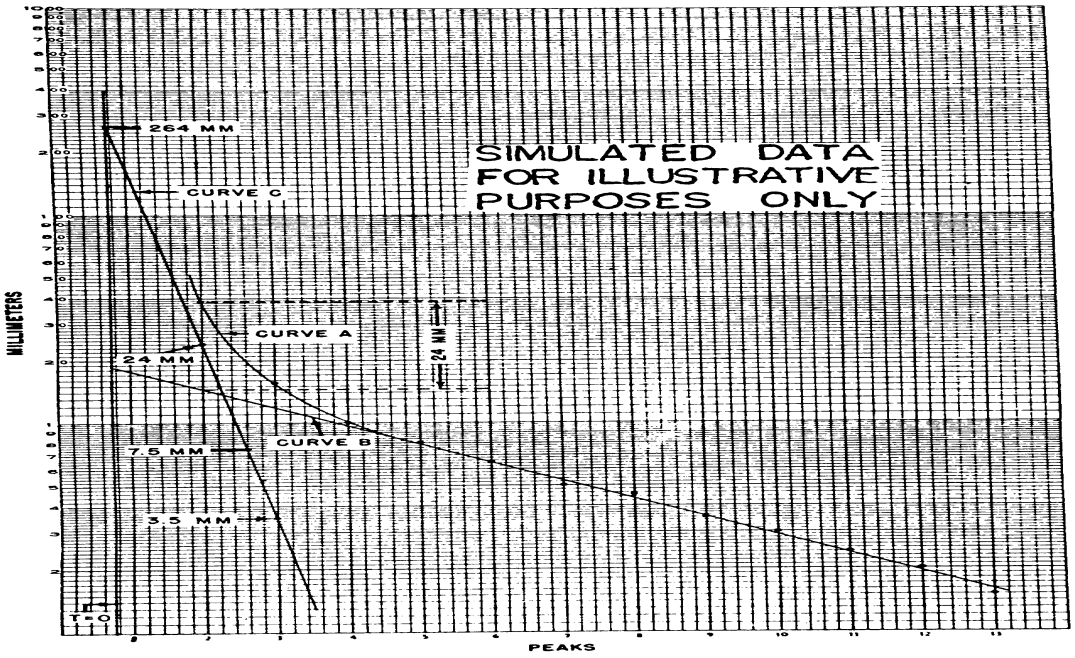

FIGURE 42-I. Sample curve used in the determination of direct-axis subtransient reactance.

TEST METHOD 43

DIRECT-AXIS TRANSIENT SHORT-CIRCUIT TIME CONSTANT TEST

43.1 General. The direct-axis transient short-circuit time constant is used by design engineers to aid in the determination of the performance of a generator under various load conditions.

43.2 Apparatus. Instrumentation for measuring load conditions, field voltage and current shall be as described and illustrated in EGSA 107T. In addition, the test recording equipment shall be described in EGSA 107T, Test Methods 1, 4, and 6, a non-inductive shunt, a timing wave source, a short circuiting switch, a separate, variable DC source for generator excitation and a prime mover capable of maintaining the generator speed within ±1 percent of rated speed under all load conditions of this method shall be required. Electrical instrumentation for this test shall have an accuracy of ±0.5 percent of reading or better.

43.3 Procedure.

a. Perform Test Method 41, Direct-Axis Transient Reactance Test.

b. On the same graph as plotted for Test Method 41:

1. Determine the point at which Curve "B" crosses the t = 0 line.
   In the example; this has been previously determined to be 18.5 mm.

2. Multiply the quantity obtained in step 1 above by 0.368.
   In the example: 18.5 x 0.368 = 6.8 mm.

3. Find the point of Curve "B" at which the quantity obtained in step 2 above is located.

4. Determine the peak at this point. In the example, this is 5.7 peaks (figure 43-I).

5. Subtract "1.0" from the number obtained in step 4 above.
   In the example: 5.7 - 1.0 = 4.7.

6. To the number obtained in step 5 above, add the time (peaks) from t = 0 to t = 1.
   In the example, this time is 0.2 peaks. 4.7 + 0.2 = 4.9 peaks.

7. Multiply the number of peaks obtained in step 6 above by the time interval between peaks, which is "1" divided by twice the frequency. In the example, the frequency is 60 Hz. The computation, then, becomes 4.9 x 1 = 0.041 second.
   This represents the direct-axis 120 transient short-circuit time constant.

c. Repeat step b above for each of the three graphs plotted for Test Method 43. The value for the direct-axis transient short-circuit time constant shall be taken as the average of the several computed values.

43.4 Results. Compare the average value of the direct-axis transient short-circuit time constant with the requirements of the contract.

43.5 Contract requirements. The following items must be specified in the individual contract:

a. The allowable range of direct-axis transient short-circuit time constant in seconds, if applicable.

b. The voltage connection(s) and frequency(ies) at which this method is to be performed.

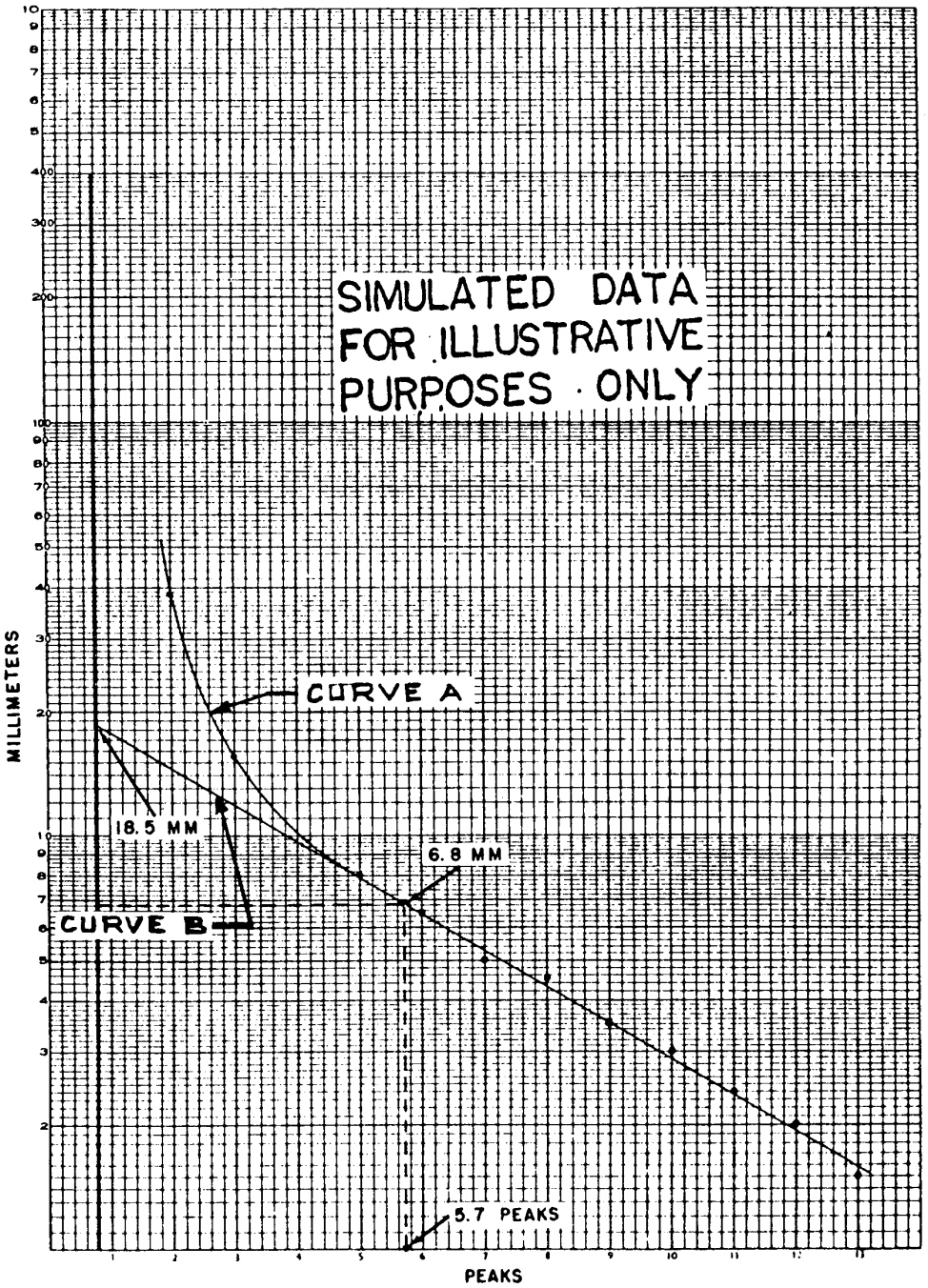

FIGURE 43-I. Sample curve used in the determination of direct-axis transient short-circuit time constant.

TEST METHOD 44

DIRECT-AXIS SUBTRANSIENT SHORT-CIRCUIT TIME CONSTANT TEST

44.1 General. The direct-axis subtransient short-circuit time constant is used by design engineers to aid in the determination of the performance of a generator under various load conditions.

44.2 Apparatus. Instrumentation for measuring load conditions, field voltage and current shall be as described and illustrated in EGSA 107T. In addition, the test recording equipment shall be described in EGSA 107T, Test Methods 1, 4, and 6, a non-inductive shunt, a timing wave source, a short circuiting switch, a separate, variable dc source for generator excitation and a prime mover capable of maintaining the generator speed within ±1 percent of rated speed under all load conditions of this method shall be required. Electrical instrumentation for this test shall have an accuracy of ±0.5 percent of reading or better.

44.3 Procedure.

a. Perform Test Method 42, Direct-Axis Subtransient Reactance Test.

b. On the same graph as plotted for Test Method 42:

1. Determine the point at which Curve "C" crosses the t = 0 line.
   In the example, this has been previously determined to be 264 mm.

2. Multiply the quantity obtained in step 1 above by 0.368.
   In the example: 264 x 0.368 = 97.15.

3. Find the point on Curve "C" at which the quantity obtained in step 2 above is located.

4. Determine the peak at this point. In the example, this is 1.3 peaks (figure 44-I).

5. Subtract "1.0" from the number obtained in step 4 above.
   In the example, 1.3 - 1.0= 0.3.

6. To the number obtained in step 5 above, add the time (peaks) from t = 0 to t = 1.
   In the example, this time is 0.2 peak. 0.3 + 0.2 = 0.5 peak.

7. Multiply the number of peaks obtained in step 6 above by the time interval between peaks, which is "1" divided by twice the frequency. In the example, the frequency is 60 Hz. The computation, then, becomes 0.5 x 1 = 0.004 second. This represents the direct-axis 120 subtransient short-circuit time constant.

c. Repeat step b above for each of the three graphs plotted for Test Method 42. The value for the direct-axis subtransient short-circuit time constant shall be taken as the average of the several computed values.

44.4 Results. Compare the average value of the direct-axis subtransient short-circuit time constant with the requirements of the contract.

44.5 Contract requirements. The following items must be specified in the individual contract:

a. The allowable range of direct-axis subtransient short-circuit time constant in seconds, if applicable.

b. The voltage connection(s) and frequency(ies) at which this method is to be performed.

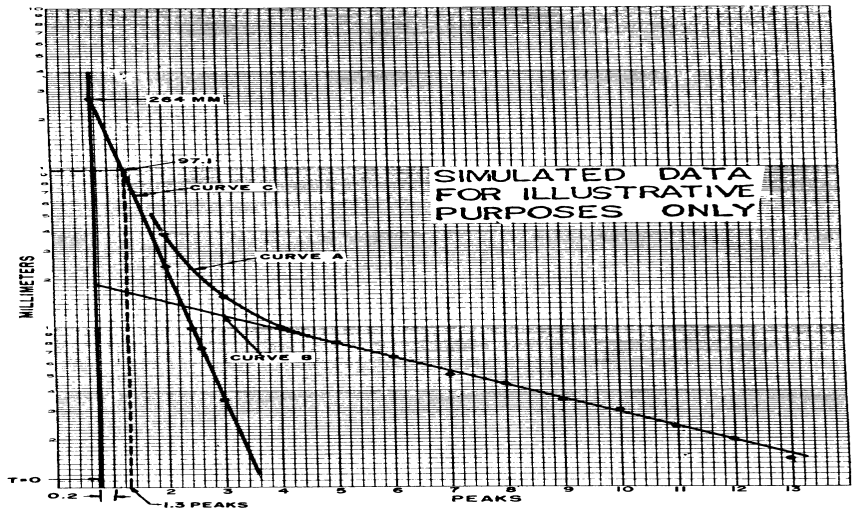

FIGURE 44-I. Sample curve used in the determination of direct-axis subtransient short-circuit time constant.

TEST METHOD 45

DIRECT-AXIS TRANSIENT OPEN-CIRCUIT TIME CONSTANT TEST

45.1 General. The direct-axis transient open-circuit time constant is used by design engineers to aid in the determination of the performance of a generator under various load conditions.

45.2 Apparatus. Instrumentation for measuring terminal voltage, generator speed, and field voltage and current shall be as described and illustrated in EGSA 107T. In addition, the test recording equipment shall be described in EGSA 107T, Test Methods 1, 4, and 6; a short circuiting switch, for the generator field; and a prime mover shall be required.

45.3 Procedure.

45.3.1 Preparation for test.

a. Mechanically connect the generator to the prime mover and provide the external excitation supply to the generator through a resistor of sufficient size to prevent injury to the supply circuit when the field is short circuited.

b. Connect the instrumentation and field shorting switch in accordance with figure 45-I for a voltage connection and frequency specified in the contract.

45.3.2 Test.

a. Start and operate the prime mover such that the generator is at rated voltage, rated speed and no load.

b. Adjust the amplitude of the generator terminal voltage trace to at least 2 inches.

c. Adjust the amplitude of the generator field voltage trace to at least 3/4 inch and set up a field voltage zero trace.

d. Set up a timing line trace.

e. Adjust the chart speed or waveform to give at least 1/8 inch separation between successive peaks.

f. Start the test recording equipment, with the generator operating at rated voltage, rated speed and no load, and operate for at least 1/4-second to record the initial steady-state traces of the terminal voltage and field voltage. Record all instrument readings.

g. Close the field short-circuiting switch and keep the test recording equipment in operation until the generator voltage decays to its residual value. Record this value on the data sheet.

45.4 Results.

45.4.1

a. Draw a voltage envelope on the chart or stored waveform.
Construct a perpendicular at t = 0 (a typical curve is shown in figure 45-III).

b. Measure the height of the initial envelope (steady-state before shorting field).

c. Measure the height of the final envelope (steady-state after shorting field).

d. Subtract final measurement from initial measurement and multiply by 0.368.

e. To the value obtained in step d above add the measurement taken in step c above.

f. Slide the scale along the curve until the envelope height is the value obtained in step e above. At this point construct a perpendicular to the timing wave.

g. From the point of the timing wave obtained in step f above, determine length of time away from t = 0. This is the direct-axis transient open-circuit time constant.

45.4.2 Compare the results with the contract requirements.

45.5 Contract requirements. The following items must be specified in the individual contract:

a. Maximum allowable direct-axis transient open-circuit time constant in seconds.

b. Voltage connection(s) and frequency(ies) at which this method is to be performed.

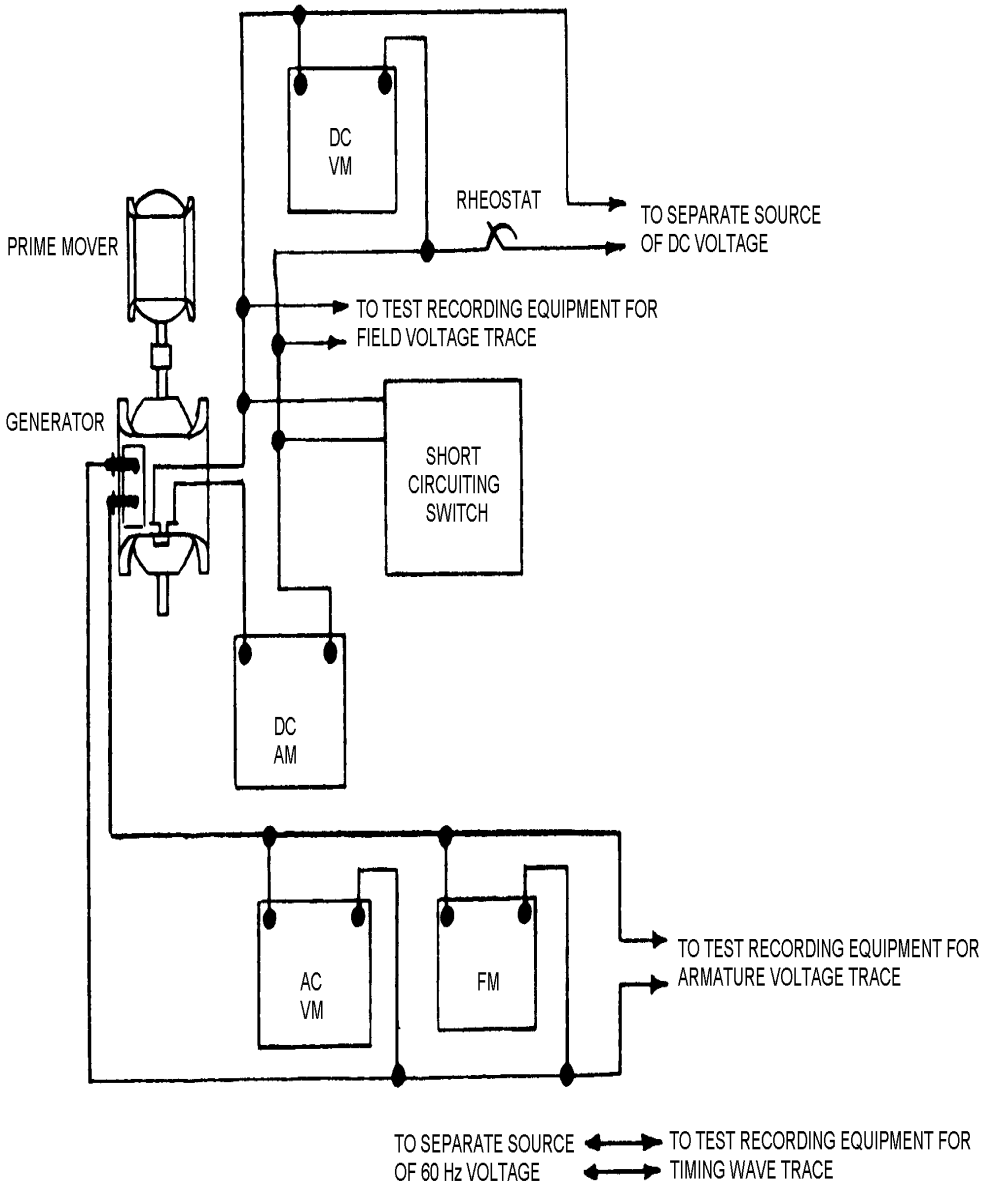

FIGURE 45-I Typical apparatus hookup for direct-axis transient open-circuit time constant test.

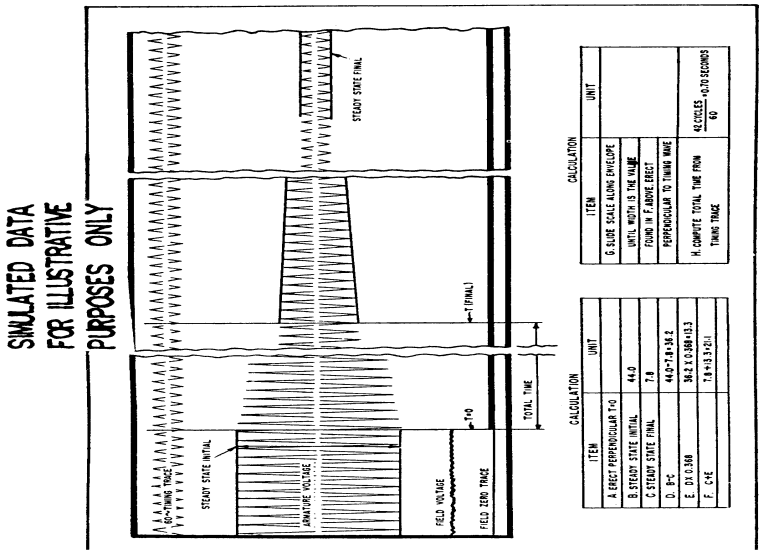

FIGURE 4301-1III. TYPICAL CHART, DIRECT-AXIS TRANSIENT OPEN-CIRCUIT TIME CONSTANT TEST.

TEST METHOD 46

SHORT-CIRCUIT TIME CONSTANT OF ARMATURE WINDING TEST

46.1 General. The short-circuit time constant of armature winding is used by design engineers as a criterion for the requirements of auxiliary equipment intended to protect the load and generator from extreme conditions.

46.2 Apparatus. Instrumentation for measuring load conditions, field voltage and current shall be as described and illustrated in EGSA 107T. In addition, the test recording equipment shall be described in EGSA 107T, Test Methods 1, 4, and 6, a non-inductive shunt, a timing wave source, a short circuiting switch, a separate, variable dc source for generator excitation and a prime mover capable of maintaining the generator speed within ±1 percent of rated speed under all load conditions of this method shall be required. Electrical instrumentation for this test shall have an accuracy of ±0.5 percent of reading or better.

46.3 Procedure.

a. Perform Test Method 41, Direct-Axis Transient Reactance Test.

b. On the test recording equipment obtained in step a above (see figure 46-I), beginning at the number two peak, determine the distance in millimeters between the zero axis and each current envelope line, at each peak, as far as steady-state. Tabulate these distances.

c. Determine the difference between the values obtained at each peak and tabulate these differences. The table shall contain four columns: column 1 shall contain the peak number; column 2 shall contain the distance between the zero axis and the upper envelope line; column 3 shall contain the distance between the zero axis and the lower envelope line; and column 4 shall contain the differences between the values in columns 3 and 4. These differences represent the asymmetrical component.

d. Plot a curve on semilogarithmic paper (or plotted using a automated equipment) of the asymmetrical component versus peak number. Plot the asymmetrical component values on the logarithmic axis and the peak numbers on the linear axis. This curve shall be added to the graph obtained in step a above and extended to cross the t = 0 line. The curve is shown in figure 46-II, and is labeled "D".

e. Determine the point at which the curve crosses the t = 0 line. In the example shown in figure 46-II, this value is 27.

f. Multiply the quantity obtained in step e above by 0.368.
In the example: 27 x 0.368 = 9.9.

g. Find the point on the curve at which the value obtained in step f above falls.

h. Determine the peak value at the point determined in step g above.
In the example, this point is 2.2 peaks.

i. Subtract "1.0" from the peak value obtained in step g above.
In the example: 2.2 - 1.0 = 1.2.

j. To the value obtained in step i above, add the peak value from t = 0 to t = 1.
In the example, this time is 0.2 peak. Therefore: 1.2 + 0.2 = 1.4.

k. Multiply the peak value obtained in step j above by the time interval between peaks, which is "1.0" divided by twice the frequency. In the example, the frequency is 60 Hz. The short-circuit time constant for armature winding in the example is

$$\frac{1.4 \times 1}{120} = 0.01167 \text{ seconds.}$$

l. Repeat steps b thru k above for each chart or stored waveform taken during step a above. The short-circuit time constant for armature winding shall be taken as the average of the several values.

46.4 Results. Compare the short-circuit time constant of armature winding with the requirements of the contract.

46.5 Contract requirements. The following items must be specified in the individual contract:

a. The maximum allowable short-circuit time constant for armature winding, if applicable.

b. The voltage connection(s) and frequency(ies) at which this method is to be performed.

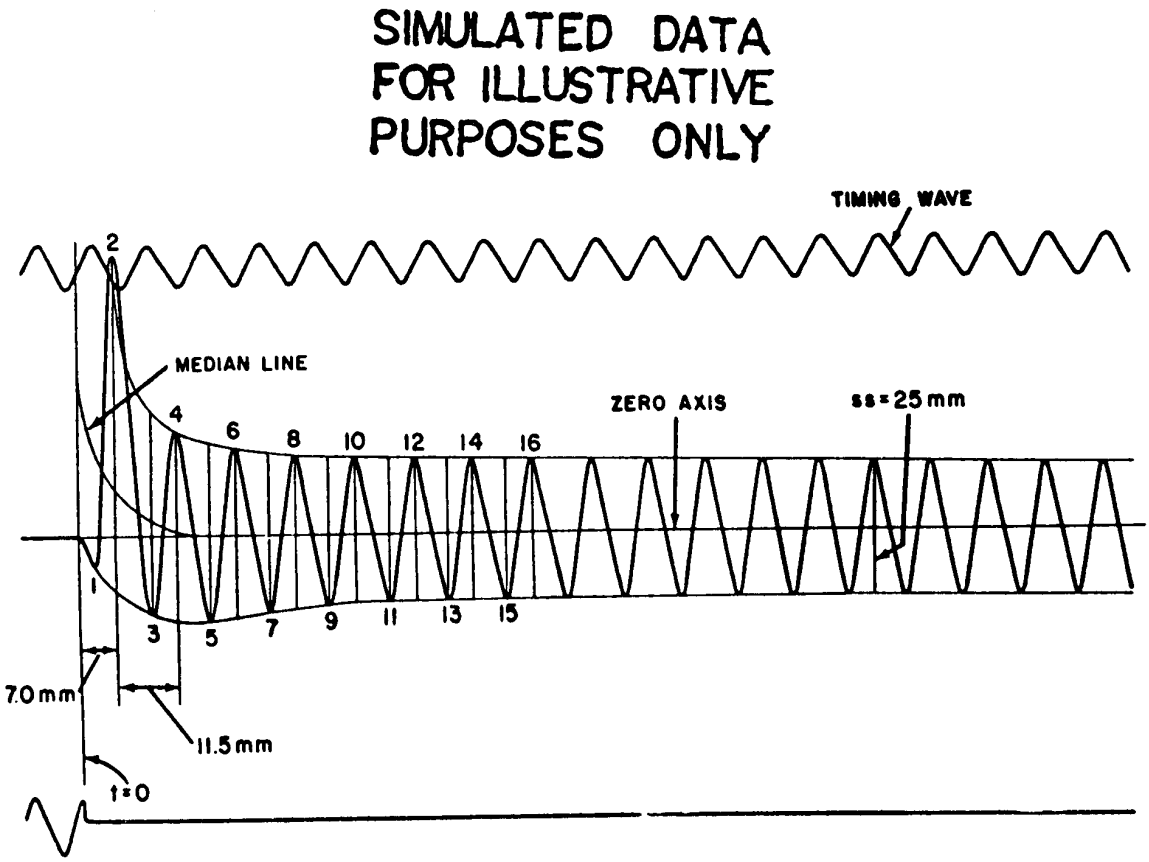

FIGURE 46-I SAMPLE WAVEFORM, SHOWING MEDIAN LINE.

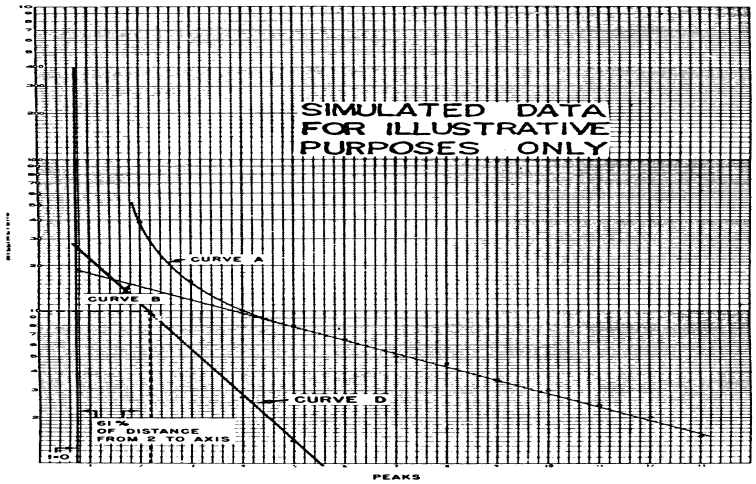

FIGURE 46-II SAMPLE CURVE USED IN DETERMINING THE SHORT-CIRCUIT TIME CONSTANT OF ARMATURE WINDING.

TEST METHOD 47

START AND STOP TEST

47.1 General. The adequacy of the starting and operating instructions on the set is essential to safe operation of the generator set. Any abnormal start and stop conditions may endanger personnel or equipment.

47.2 Apparatus. A stopwatch (or similar timing device) shall be required.

47.3 Procedure. Using the items provided as part of the generator set, perform the following operations:

a. Start the generator set by following the operating instructions on the set. Use the stopwatch (or similar timing device) to determine the time required to start the set. The start time is defined as the period of time from initiating start procedures until the generator set has achieved rated voltage and frequency (speed) without the further use of starting aids.

b. Operate the set at rated voltage, rated frequency (speed), and no load for 5 minutes with the circuit interrupter closed.

c. Stop the set by following the operating instructions on the set. Use the stopwatch (or similar timing device) to determine the time required to stop the set. A set is considered to have stopped when all rotating members are at zero rpm, with the exception of the turbocharger, if used.

d. Repeat steps a thru c two additional times.

e. Repeat steps a thru d utilizing any alternate starting methods provided for in the operator's manual or set design (e.g. rope start) but not including remote starting.

47.4 Results. The data sheet shall indicate how the set performed during this test, including the time to start, the operating time, the voltage and operating speed during each period of operation, and the manner and time of set shutdown. Compare these results with the requirements of the contract.

47.5 Contract requirements. The following items must be specified in the individual contract:

a. The voltage connection and frequency at which this method is to be performed.

b. Time limit to start the set.

c. Time limit to stop the set, if applicable.

TEST METHOD 48

START AND STOP TEST (REMOTE CONTROL)

48.1 General. The adequacy of the remote control starting and operating instructions on the set is essential to safe operation of the generator set. Any abnormal start and stop conditions may endanger personnel or equipment.

48.2 Apparatus. A remote-control station consisting of two momentary-push button switches connected to a 3-conductor, number 16 AWG, 150-foot cable as shown in figure 48-I and a stop watch (or similar timing device) shall be required.

48.3 Procedure.

48.3.1 Preparation for test. Connect the remote-control station as shown in figure 48-I.

48.3.2 Test.

a. Start the generator set by following the remote-control operating instructions on the set or in the technical manual. Use the stopwatch (or similar timing device) to determine the time required to start the set. The start time is defined as the period of time from initiating start procedures until the generator set has achieved rated voltage and frequency (speed) without the further use of starting aids.

b. Operate the set at rated voltage, rated frequency, and no load for 5 minutes.

c. Stop the set by following the operating instructions on the set or in the technical manual. Use the stopwatch (or similar timing device) to determine the time required to stop the set. A set is considered to have stopped when all the rotating members are at zero rpm, with the exception of the turbocharger, if used.

d. Repeat steps a thru c above two additional times.

e. With the remote-local selector switch in the "off" or "local" position attempt to start the set from the remote-control station. Record whether the set started.

48.4 Results. The data sheet shall indicate how the set performed during this test, including the time to start, the operating time, the voltage and operating speed during each period of operation, the manner and time of set shutdown, and if the set started from the remote station with the remote-local selector switch in the "off" or "local" position. Compare these results with the requirements of the contract.

48.5 Contract requirements. The following items must be specified in the individual contract:

a. The voltage connection and frequency at which this method is to be performed.

b. The time limit for remote starting, if different than the time limit for starting at the set.

c. The time limit for remote stopping, if applicable.

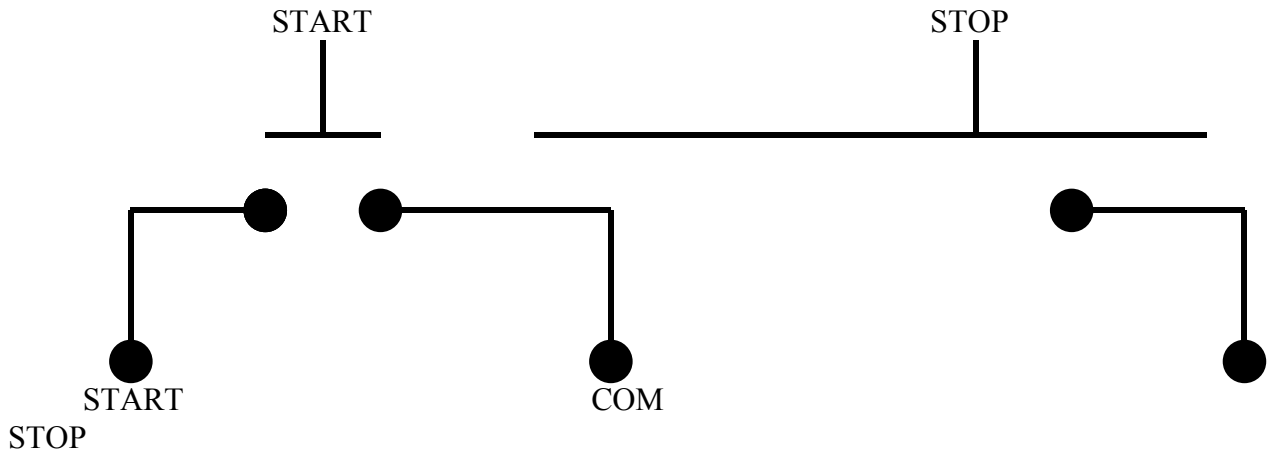

FIGURE 48-I. Connection diagram for remote control station.

TEST METHOD 49

START AND STOP TEST (REMOTE CUBICLE)

49.1 General. The remote cubicle must be capable of starting, operating, and monitoring the set from distances up to 500 feet.

49.2 Apparatus. Instrumentation for measuring load conditions, field voltage and current, and ambient temperature shall be as described in EGSA 107T (unless otherwise specified in the required document).

49.3 Procedure.

49.3.1 Preparation for test.

a. Remove the control cubicle from the set and connect the cubicle to the set with a 500 foot cable in accordance with instructions on the set or in the technical manual, unless otherwise specified in the contract.

b. Connect the load and field instrumentation for one voltage connection and frequency specified in the contract.

49.3.2 Test.

a. Start and operate the generator set using the remote cubicle at rated voltage, rated frequency and rated load.

b. Perform Test Method 59, Regulator Range Test.

c. Perform Test Method 60, Frequency Adjustment Range Test.

d. Perform method 513.2, Indicating Instrument Test (Electrical).

e. Perform any additional method(s) specified in the contract.

f. Repeat steps a thru e above at any other voltage connection and frequency specified in the contract.

g. Shut down the set using the remote cubicle.

49.4 Results. Compare the results with the requirements of the contract.

49.5 Contract requirements. The following items must be specified in the individual contract:

a. Voltage connection(s) and frequency(ies) at which this method is to be performed.

b. Length of cable to the remote cubicle, if other than as specified herein.

c. Any methods to be performed not specified herein.

d. Maximum and minimum voltages between which the generator set shall perform.

e. The maximum allowable voltage regulation (droop).

f. Maximum frequency adjustment(s).

g. Minimum frequency adjustment(s).

h. The accuracy of each instrument contained in the cubicle.

i. Standard instrument calibration requirements, if different than those required by EGSA 107T .

TEST METHOD 50

TORSIOGRAPHING TEST

50.1 General. Torsional vibration means the repeated twisting of a shaft, back and forth, about its axis.

If the shaft of an engine is twisted and then released, it will vibrate back and forth at a number of vibrations per second (natural frequency) which will be determined by the stiffness of the shaft and the type of weights attached to various parts of the shaft. If the shaft is left alone, these vibrations will gradually die out, but if a vibrating force is applied which rises and falls at a time rate close to the natural frequency, torsional vibration will build up and may eventually destroy the shaft. Therefore, since the turning effort of an engine varies during each revolution, it is possible to run the engine at a speed at which the frequency of the turning effort variations coincides with the natural frequency of the shaft system, thus causing torsional vibrations to build up.

Torsional vibration is different from other forms of vibration in that there may be no visible or audible indications that dangerous vibrations are present. Furthermore, an engine-generator set with dangerous torsional vibrations may not show any defects during inspection, yet shaft failure may occur after many hours of operation. It is necessary to use special instrumentation (see figures 50-I and 50-II) and compare the instrument readings with certain calculated values in order to make sure the engine-generator set is not subjected to injurious torsional vibrations. The instrumentation used shall not require attachment of masses of such a magnitude to the shaft that they appreciably affect the characteristics of the system.

The instrumentation used in torsional vibration studies is designed to measure changes in speed, not speed itself, and the frequency of these changes in speed. This can be done either mechanically or electrically.

50.2 Apparatus. Load instrumentation shall be as described in EGSA 107T (unless otherwise specified in the required document). In addition, a suitable torsiograph instrument (see figures 50-I and 50-II or equivalent) shall be required.

50.3 Procedure.

50.3.1 Preparation for test.

a. Obtain the manufacturer's mathematical analyses, indicating probable compliance with the limits of the equipment specification. The mathematical analyses shall include:

    1. A description of the system relating information pertinent to analyses such as operating speed range and identification plate data.

2. A mass-elastic assembly drawing, showing the arrangement of the units in the generator set and dimensions of shafting, including minimum diameters (or section moduli) of all shafting in the system.

3. A labeled line diagram of the mass elastic system indicating values of masses, stiffness, equivalent lengths, and equivalent diameters including basic assumptions where applicable. See figure 50-III.

4. Sample calculations showing procedure used to obtain relative stress.

5. Holtzer tables for the natural frequencies of all significant modes of vibration. Table shall include calculation of equivalent stresses in each shaft length for a one degree deflection (twist) at mass no. 1.

b. Connect the load and instrumentation for the applicable voltage and frequency connection.

c. Install the torsiograph instrument on one end of the shaft of the generator set per the instrument manufacturer's instructions.

50.3.2 Test.

a. Start and operate the set at rated voltage, rated frequency (speed) and rated load. Record all instrument readings including the torsiograph output.

b. Reduce the load to zero and record all instrument readings.

c. Repeat steps a and b above for the maximum and minimum frequencies specified in the contract.

d. Repeat steps a and c above for any other load condition specified in the requirement document.

e. Repeat steps a thru d above for any other rated frequency specified in the requirement document.

50.4 Results.

a. Recalculate the Holtzer table(s) supplied by the manufacturer to insure that no mathematical errors exist (see figure 50-IV).

b. Reduce the data taken from the torsiograph instrumentation per the manufacturer's instructions to determine both the frequency of vibration and the amount of twist in degrees for each condition specified in the contract.

c. Using the frequency of the torsional vibration found in step b above determine the applicable Holtzer table to use, e.g., use the first mode Holtzer table for any vibrational frequency below the first mode natural frequency; use the second mode Holtzer table for any vibrational frequency above the first mode natural frequency but below the second mode natural frequency, etc.

d. From the applicable Holtzer table determine the maximum shaft stress for a one degree deflection at mass no. 1. This will be the largest number in the summation column.

e. To determine the actual shaft stress multiply the maximum shaft stress by the actual deflection at mass no. 1 as found in step b above.

f. Repeat steps c thru e above for each load and frequency condition specified in the contract.

g. Tabulate the data and results into a table. See figure 50-V.

h. Have this data analyzed by a competent impartial agency.

50.5 Contract requirements. The following details must be specified in the individual contract.

a. Rated frequency(ies) at which this test shall be performed.

b. Maximum and minimum frequencies between which specified torsional stresses shall not be exceeded, in percent of rated frequency.

c. Load conditions at which this test shall be performed if other than rated load and no load.

d. Maximum allowable torsional stress in the shaft in pounds per square inch.

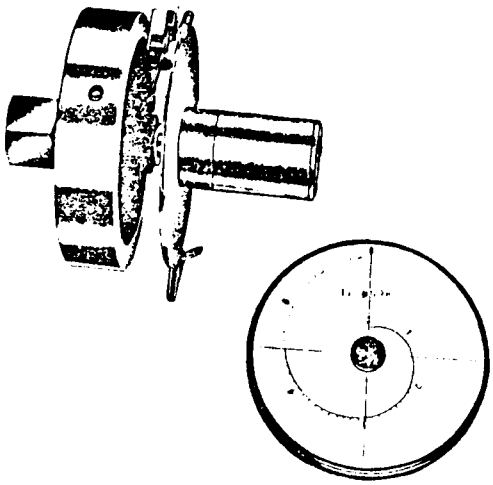

FIGURE 50-I REPRESENTATIVE MECHANICAL TORSIOGRAPH

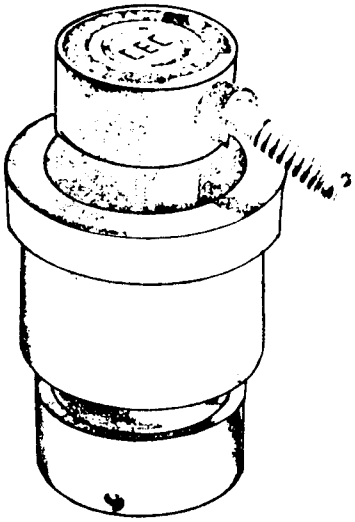

FIGURE 50-II REPRESENTATIVE ELECTRICAL TORSIOGRAPH

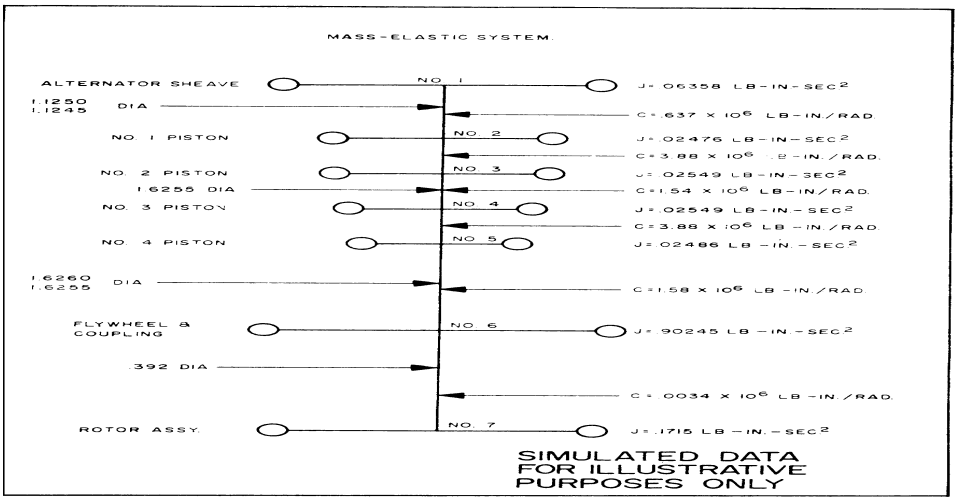

Figure 50-III Typical Mass Elastic System Diagram

HOLTZER TABLE

$w^2 = 4.147567463 \times 10^6$
$w = 2.036557749 \times 10^3$
$f = 324.1285066$ Hz

TATION	J	$Jw^2/10^6$	β	$Jw^2\beta/10^6$	$\Sigma Jw^2\beta/10^6$	$C/10^6$	$\Sigma Jw^2\beta/C$
1	0.06358	0.2637023393	1.0000000000	0.2637023393	0.2637023393	0.637	0.4139754149
2	0.02476	0.1026937704	0.5860245851	0.0601810742	0.3238834135	3.88	0.834751066
3	0.02549	0.1057214946	0.5025494785	0.0531302820	0.3770136955	1.54	0.2448140880
4	0.02549	0.1057214946	0.2577353905	0.0272481707	0.4042618662	3.88	0.1041912026
5	0.02486	0.1031085271	0.1535441879	0.0158317151	0.4200935813	1.58	0.2658820135
6	0.90245	3.742972257	-0.1123378256	-0.4204773646	-0.0003837833	0.0034	-0.1128774412
7	0.17150	0.7113078199	+0.0005396156	+0.0003838328	+0.0000000495	--	--

$= 1.0000000000$ at Sta. 1

$\beta = (\text{Sta. 1}\beta - \text{Sta. 1}\ \Sigma Jw^2\beta/c)$ at Sta. 2
etc.

SIMULATED DATA
FOR ILLUSTRATIVE
PURPOSES ONLY

FIGURE 504.2-IV TYPICAL HOLTZER TABLE

Figure 50-IV Typical Holzer Table.

RESULTS

ENGINE SPEED RPM	LOAD %	VIBRATION PERIOD ms X 1/3	VIBRATION FREQUENCY Hz (CAL)	VIBRATION w RAD/SEC (CAL)	VIBRATION LEVEL V(P-P)	ANGULAR DISPLACEMENT DEGREE (CAL)	TORSIONAL STRESS PSI (CAL)
3200	0	10.2	294	1848	1.2	0.0361	595
3200	100	10.2	294	1848	1.7	0.0512	843
3300	0	10.2	294	1848	0.84	0.0254	419
3300	100	9.9	303	1903	1.7	0.0496	818
3400	0	10.8	278	1745	1.0	0.0318	524
3400	100	10.2	294	1848	1.9	0.0572	943
3500	0	10.2	294	1848	1.8	0.0541	892
3500	100	9.9	303	1903	2.6	0.0758	1249
3600	0	9.6	311	1952	1.7	0.0483	796
3600	100	9.5	316	1985	2.2	0.0616	1015
3700	0	9.9	303	1903	1.3	0.0380	626
3700	100	9.9	303	1903	1.9	0.0554	913
3800	0	10.4	288	1808	1.4	0.0431	710
3800	100	9.9	303	1903	1.9	0.0554	913
3900	0	11.1	270	1695	1.5	0.0492	811
3900	100	9.9	303	1903	2.6	0.0758	1249
4000	0	9.9	303	1903	1.6	0.0467	770
4000	100	11.2	268	1682	2.3	0.0758	1249

SIMULATED DATA FOR ILLUSTRATIVE PURPOSES ONLY

FIGURE 50-V TYPICAL RESULTS TABULATION