METHOD 11

MEASUREMENT OF WEIGHT AND FORCE

11.1 GENERAL. All instruments and test equipment used in measuring weights, operating forces, spring tensions, and brake torque's shall be calibrated to laboratory standards whose calibration is traceable to the National Institute of Standards and Technology.

TEST METHOD 12

MEASUREMENT OF PRESSURE

12.1 GENERAL. The following instruments are used to measure any of the various fluid pressures encountered in testing engine-generator sets.

12.2 DEADWEIGHT GAGES. The most accurate pressure-measuring instruments for gage pressures above one atmosphere are deadweight gages. These devices employ a small piston loaded with a known deadweight to balance the pressure of oil in a vertical cylinder below the piston. Accurate measurements of the piston area and value of the deadweights are easily obtained so that the instrument can be very accurately calibrated. The only remaining source of error is static friction and this is eliminated by rotating the piston and weights about their vertical axes. These instruments can be used, however, only for constant pressures greater than atmospheric, since they are not direct reading instruments. They are most useful as standards for relatively high pressures, to be used to calibrate other instruments.

12.3 MANOMETERS. Liquid manometers always consist of two chambers partially filled with a liquid and connected so that the liquid is free to flow from one to the other. A pressure applied to the liquid in one chamber is communicated to the other chamber only through the liquid. If the pressures in the two chambers are unequal, the liquid will flow from one chamber to the other until the unbalanced pressure is exactly offset by the unbalanced liquid head. If the density of the liquid is known, the pressure can be computed from the measured difference between the liquid levels. The liquid used in manometers may be water, mercury, alcohol, oil, or any other, depending upon the pressures to be measured. Manometers always measure a pressure difference. Therefore, the absolute pressure on one chamber must be known before the absolute pressure on the other chamber can be calculated. For measuring pressure differences such as the drop across an orifice, or in a venturi, the manometer is connected to show the difference directly. Manometers are simple, direct reading, accurate instruments that can be used for a wide range of applications and for pressures both above and below atmospheric. They are impractical for use with pressure differences much greater than one atmosphere, but anywhere within their useful range, their accuracy and simplicity make them the preferred type of instrument for static or slowly changing pressures.

12.4 MECHANICAL GAGES. Pressure gages making use of bellows and bourdon tubes to change pressure into a mechanical reading are available for all ranges of pressures encountered in testing engine-generator sets. These instruments are convenient to use, direct reading, and durable, but, they must not be subject to pressures greater than their ratings, nor to high temperature gases because their condition may destroy the calibration. Because of their low mass moving systems, they are better adapted to the measurement of changing pressures than either of the types previously discussed. Mechanical gages are available with ranges above and below atmospheric pressure, although they usually indicate only gage pressure (absolute pressure may be calculated by summing atmospheric pressure and gage pressure). Both indicating and recording types are available.

12.5 HIGH-SPEED MECHANICAL GAGES. For the measurement of dynamic pressures such as firing pressures in an engine, and diesel fuel-injection pressures during operation, instruments having very high-speed response are necessary. This is achieved mechanically by limiting the number of moving parts to small piston and spring, or a small diaphragm, and restricting the motion of these parts to a few thousandths of an inch. This motion usually is detected electrically by the opening or closing of a pair of contacts. Two methods are employed to secure a reading from such an instrument. One method uses a calibrated spring to oppose the motion of the piston or diaphragm. The other uses compressed gas and a standard pressure gage. In either case, the opposing force is increased until the contacts just fail to close, as indicated by a neon light energized through them. The peak test pressure is then equal to the value of the opposing force. All of these mechanical instruments are subject to errors due to differences in the dynamic and static calibrations, and due to mechanical resonance effects in the instrument inself. However, they are convenient to use and easy to calibrate statically.

12.6 HIGH-SPEED ELECTRICAL GAGES. Some of the disadvantages of the mechanical instruments described above are overcome by using electrical pickups. In these devices, a stiff diaphragm usually is mounted flush with the surface of the engine combustion chamber. Its motion is then measured electrically and recorded. Because of the lack of long, narrow passages, resonance is avoided, and, because of the low-mass-elastance ratio, mechanical resonance is avoided in the diaphragm. The instrument can be made sensitive to very high-frequency impulses, depending upon the response of the connected electrical circuit. Electrical pressure transducers are available to measure a wide range of pressures.

TEST METHOD 13

TEST CHAMBERS

13 GENERAL. Test chambers in which conditions such as temperature humidity, and atmospheric pressure are accurately controlled are called environmental chambers. The environmental chambers to be considered in this handbook are "hot rooms", "cold rooms", and "altitude chambers".

13.1 HOT ROOMS

13.1.1 CONTROL OF TEMPERATURE. Hot rooms used to test generator sets must have adequate temperature control to meet the requirements of the high temperature test. The average ambient air temperature shall not vary more than 3 °C throughout the test, as measured by thermocouples placed in accordance with Test Method 20. The hot room shall have provisions to heat the intake air, to recirculate a certain amount of the heated air, to admit fresh air, to keep all the air in the room circulating and to allow the excess heat and engine exhaust to escape. The recirculated air shall not return within the hot room, but shall be conducted around the chamber in a separate duct.

13.1.2 SIZE OF HOT ROOM. The hot room shall be large enough so that the walls are at least 6 feet away from the generator set under test, with the exception that if the room has an inner screen or "false" wall with the air passing on both sides so that it is uniformly at the hot room ambient temperature, this screen or "false" wall may be less than 6 feet, but not less than 3 feet, from the generator set. In this case, the outer wall may be as close to the screen or "false" wall as desired, provided that the ambient air is made to circulate between the screen or "false" wall and the outer wall. It may also be necessary to use air baffles and deflectors in the room to maintain good temperature and air flow control, and, as long as the baffles and deflectors are at nearly the same temperature as the ambient air in the hot room, they may be placed closer to the generator set than 6 feet. The room shall be at least 3 feet higher, inside dimension, than the generator set being tested.

13.1.3 AIR CIRCULATION IN HOT ROOM. The air in the hot room shall be in continuous motion to prevent the formation of local conditions, "hot" or "cold" spots, within the room which are different from the average in the room. However, the chamber air velocity shall not exceed 5 mph. Air velocities greater than 5 mph are allowable provided the increased velocities are necessary to maintain the specified chamber temperature but in no instance shall the velocity exceed 15 mph. In general, it is easier to control the conditions in the hot room if the air flow is from the generator end of the set toward the engine cooling air exhaust.

13.2 COLD ROOMS.

13.2.1 CONTROL OF TEMPERATURE. Cold rooms used to test generator sets must have adequate temperature control to meet the requirements of the cold test. The average ambient air temperature shall be uniform within 3 °C throughout the test as measured by thermocouples placed in accordance with Method 202.1. The cold room shall have provisions to dry and chill the intake air, to recirculate the chilled air, to keep all the air in the room circulating, to remove the heat generated by the set, and to allow the engine exhaust to escape.

An estimate of the amount of heat generated by a generator set operating at rated load is 1/3 of the total heat as useful power, 1/3 as exhaust heat and 1/3 as engine heat to be removed by the engine cooling system. This is true for spark or compression ignition engines. For operation in a cold room the exhaust system must be vapor tight, not only due to the poisonous gases but because even a slight leak will emit water vapor to the room which will freeze to the cooling coils, thus lowering the ability of the coils to transfer heat. In addition to being vapor tight the exhaust system may be insulated to prevent excessive heat transfer to the room.

The fresh air intake to the chamber must have provisions to dry the air entering the cold room as well as chill it to the ambient temperature of the cold room. A suggested method of drying the air is to pass it through dry silica gel. The air dryer must have sufficient capacity to supply dry air for the duration of the operational portion of the cold test(s). Dry air is defined as air having a dew point of at least 3 C° less than chamber ambient.

13.2.2 SIZE OF COLD ROOM. The cold room shall be large enough so that the walls are at least 6 feet away from the generator set under test, with the exception that if the room has an inner screen or "false" wall with the air passing on both sides so that it is uniformly at the cold room ambient temperature, this screen or "false" wall may be less than 6 feet, but not less than 3 feet, from the generator set. In this case, the outer wall may be as close to the screen or "false" wall as desired, provided that the ambient air is made to circulate between the screen or "false" wall and the outer wall. It may also be necessary to use air baffles and deflectors in the room to maintain good temperature control, and, as long as the baffles and deflectors are at nearly the same temperature as the ambient air in the cold room, they may be placed closer to the generator set than 6 feet. The room shall be at least 3 feet higher, inside dimension, than the generator set being tested.

13.3 ALTITUDE CHAMBERS

13..3.1 CONTROL OF TEMPERATURE. Altitude chambers used to test generator sets must have adequate temperature control to meet the requirements of the altitude operation test. The average air temperature shall be uniform within 3 °C throughout the test as measured by thermocouples placed in accordance with Method 202.1. The altitude chamber shall have provisions to heat the intake air, to recirculate a certain amount of the heated air, to dry the chamber of engine exhaust while maintaining the exhaust back pressure at the same value as it would be if it was exhausting into the chamber proper.

13.3.2 SIZE OF ALTITUDE CHAMBER. The altitude chamber shall be large enough so that the walls are at least 6 feet away from the generator set under test, with the exception that if the room has an inner screen or "false" wall with the air passing on both sides so that it is uniformly at the cold room ambient temperature, this screen or "false" wall may be less than 6 feet, but not less than 3 feet, from the generator set. In this case, the outer wall may be as close to the screen or "false" wall as desired, provided that the ambient air is made to circulate between the screen or "false" wall and the outer wall. It may also be necessary to use air baffles and deflectors in the room to maintain good temperature control, and, as long as the baffles and deflectors are at nearly the same temperature as the ambient air in the cold room, they may be placed closer to the generator set than 6 feet. The room shall be at least 3 feet higher, inside dimension, than the generator set being tested.

13.3.3 CONTROL OF PRESSURE. A means of controlling and maintaining the pressure of the chamber must be provided. The pressure shall be controlled to within ±50 feet of the specified altitude value.

13.3.4 AIR CIRCULATION. The air in the altitude chamber shall be in continuous motion to prevent the formation of local conditions within the chamber which are different from the average in the chamber. In general, it is easier to control the conditions in the hot room if the air flow is from the generator end of the set toward the engine cooling air exhaust.

13.4 SAFETY. A viewing port should be installed to allow visual inspection of the generator set without entering the test chamber. Carbon monoxide (CO) and explosive mixtures detectors and a means to shut down the set in an emergency are also required. Working personnel should be aware of conditions within the test chamber prior to entering.

TEST METHOD 14

MEASUREMENT OF SOUND LEVEL

14.1 GENERAL. For some applications it is desirable that an engine-generator set operate as quietly as possible without impairing its operating efficiency. Some manufacturing specifications contain requirements for limits of operating noise, in terms of units of standard reference sound level. The standard reference level is defined as 0.0002 microbar (a pressure of 0.0002 dyne per square centimeter) at 1,000 Hertz.

14.2 SOUND LEVEL METER. A sound level meter is an instrument for reading, in terms of a standard reference sound level, the sound level at its microphone. The instrument consists essentially of a microphone, electronic amplifying and filtering equipment, octave band analyzer and an indicating meter calibrator. The American National Standards Institute (ANSI) Standards for these meters include those listed in MIL-STD-1474 for octave, half-octave, and third-octave band filter sets.

This instrument is extremely sensitive to sound from any source. Therefore, to accurately determine the noise characteristics of a generator set, the test should be made in a quiet rural area where sources of sound other than from the unit under test are at a minimum.

TEST METHOD 15

DETERMINATION OF PHASE ROTATION

15.1 GENERAL. During any cycle, an ac voltage varies from zero volts to a maximum, to zero, to a minimum, and finally back to zero. When each of the voltages of a three-phase system are observed simultaneously, it is noted that the time of arrival at the maximum voltage of each phase is different. If phase one reaches a maximum first, followed by phase two and then phase three, the phase rotation is 1-2-3. If phase one reaches maximum, followed by phase three and then phase two, the phase rotation is 1-3-2. This orientation of the leads is important since a three-phase motor will run in one direction when connected 1-2-3, and in the reverse direction if connected 1-3-2. Moreover, if two generator sets are to be operated in parallel, the phase rotation of the connections must be the same for both sets, or a short circuit will occur.

15.2 PHASE ROTATION INDICATORS

15.2.1 MOTOR TYPE. A three phase ac motor with a disc or rag fastened to the shaft to indicate the direction of rotation, whose leads are marked to show which are 1, 2 and 3, and whose direction of rotation is known when lead 1 is connected to phase one, lead two is connected to phase two and lead 3 is connected to phase three, may be used.

15.2.2 PORTABLE INDICATORS. Two types of portable indicators are available. The first type is essentially a small motor whose speed of rotation is low and whose direction of rotation is known and easily seen. The second type consists of an electrical circuit with two neon tubes appropriately internally connected so that one or the other will light, depending upon the phase rotation.

15.2.3 MAKESHIFT INDICATOR. Phase rotation may be determined by connecting two sets of two lamp bulbs in series between corresponding terminals of the test generator and a source of three phase voltage of the same frequency and a known phase rotation. The third terminal of the test generator shall be connected directly to the third terminal of the source (figure 15-1). If the phase rotation of the generator is the same as that of the source, the lamps will blink simultaneously. If the phase rotation is not the same, the lamps will blink alternately.

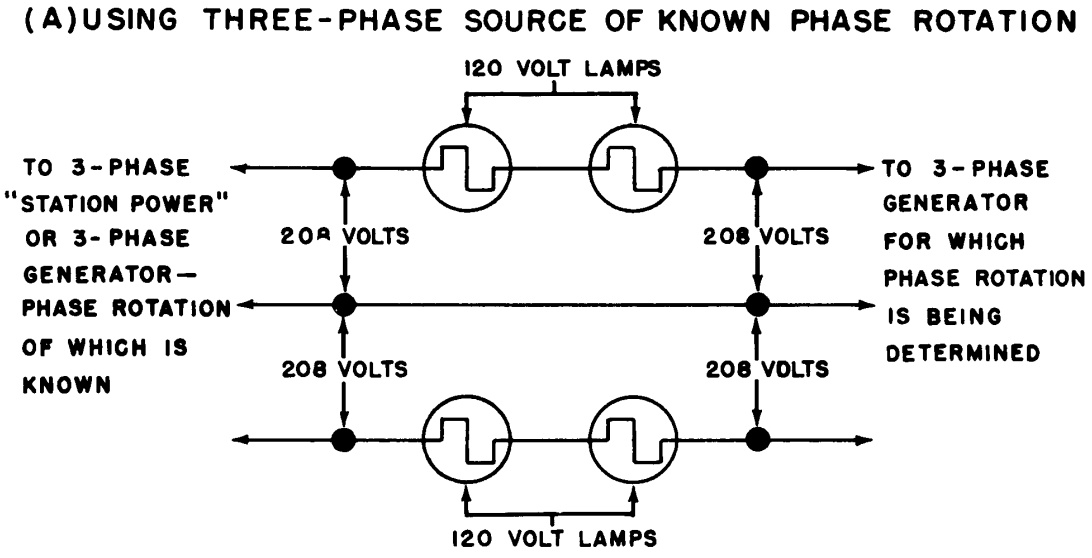

FIGURE 15-1. Makeshift phase rotation indicator.

TEST METHOD 16

DETERMINATION OF PHASE RELATIONSHIP

16.1 GENERAL. Two or more ac generator sets may be operated in parallel provided that their (1) phase sequences, (2) voltages and (3) frequencies are the same. The usual method of determining that two or more sets are in phase is the dimming of the paralleling lights. However, some generator sets contain paralleling aid devices which must be tested to determine the exact phase relationship between the sets at the time the sets are allowed to parallel.

16.2 PHASE ANGLE METER. The phase angle meter employs pulse measurement of the difference in time between zero and crossover of the compared voltages. The phase angle meter differentiates the input waves and the difference signal is displayed on a direct reading meter in electrical degrees.

16.3 OTHER METHODS. It is possible to determine phase relationship in various ways using instruments other than the aforementioned types. These other methods include, but are not limited to, the use of oscilloscopes; however, the set-ups, procedures and interpretations of results of these other methods are usually complex. Before electing to use any other method, careful consideration should be given to its acceptability, ease of comprehension and potential for misinterpretation. If such a method is intended to be used for government acceptance or qualification tests, prior approval of such use should be obtained through the government contracting officer as early in the program as possible.

TEST METHOD 17

ELECTRICAL INSTRUMENTS: CARE, INSPECTION, USE, AND REQUIRED ACCURACY

17.1 GENERAL. The following requirements applicable to instruments and equipment commonly used in the testing of engine generator sets shall be complied with.

17.2 CARE, INSPECTION AND USE OF INSTRUMENTS. The following precautions apply in general to the use of electrical instruments and those mechanical instruments, employing jewel bearings, small operating torques, or delicate movements.

Before any instrument is used, it should be inspected to determine that the pointer is free and rests at zero, if applicable. No instrument shall be used that sticks or binds at any part of the scale, or has a zero error.

Instruments containing permanent magnets shall neither be carried through nor placed in strong magnetic fields because the accuracy of the instrument may be affected.

Cables carrying high currents to an instrument, or near it, shall be kept close together and must never be placed on opposite sides of iron or steel objects, especially if they are resting on an iron or steel surface.

An instrument should read the same in each of four horizontal positions, 90 degrees apart, if it is unaffected by stray fields.

Instruments should not be dropped, bumped against each other, or placed on tables or benches used for such work as hammering, chipping, or riveting. Steel pivots resting on jewel bearings support the moving parts of most instruments and the pressures exerted on the jewel by the pivot in such a bearing is usually of the order of several tons per square inch. For this reason, shock and vibration can easily damage jewel bearings and cause erroneous readings.

Instrument cover glasses should never be cleaned or rubbed with a dry cloth because of the danger of building up a static electric charge on the glass. If a cover glass becomes charged, it may be discharged by rubbing gently with a damp cloth, or by moistening it with the breath. In either case, no moisture should be allowed to collect inside the instrument case.

Care should be taken to avoid errors due to parallax when reading any instrument. Recording instruments should be calibrated and read on the chart paper graduations rather than on the indicator scale.

Actual instrument readings shall be entered on all data sheets and all curves shall be carefully plotted. Readings shall never be corrected for instrument errors, transformer ratios, or scale factors before being entered on the data sheets. When it is desirable to have true values appear on the data sheet, two columns shall be used; the first for the actual instrument reading, and the second for the corrected value.

17.3 ACCURACY OF INSTRUMENTS. Indicating laboratory-type electrical instruments referred to in this handbook, shall have an accuracy at least 0.5 percent of full scale. Instruments will be selected and connected to indicate in the accurate portion of their range.

Digital meters generally offer greater resolution than the analog models they replace. For typical prototype and acceptance testing, three significant digits are required for all electrical measurements unless additional digits are needed for clarity or definition for the applicable test.

17.4 REQUIREMENT DOCUMENT REQUIREMENTS. One of the following items must be specified in the individual requirement documents:

a. Accuracy of instruments used for acceptance testing shall be in accordance with EGSA 107T , Test Method 17

b. Accuracy of instruments used for acceptance testing shall be in accordance with (the individual requirement document shall specify the document or clause governing accuracy of instruments)

TEST METHOD 18

GENERAL INSTRUCTIONS FOR CONNECTING TESTING INSTRUMENTS

18.1 GENERAL. Instrument usage is of critical importance in the determination of the quantitative value of effects occurring during tests. If the apparatus is improperly connected, the resulting data will either be useless or qualitative at best.

On the following pages are instructions and schematic diagrams indicating the methods of connecting the most commonly used instruments required during the performance of the methods contained in EGSA 107T. It is recognized that the terminal posts of all instruments are not in the same place as those shown in the diagrams and judgement must be exercised in connection of any specific instrument. The manufacturer's instructions should always be consulted in case of doubt as to the proper utilization of any test apparatus.

When recording instruments are required, they are to be connected into the circuit in the same manner as shown for indicating instruments.

18.2 CALIBRATION OF INSTRUMENTS. All test instruments shall be calibrated at maximum intervals of 6 months to insure their accuracy. Test instruments shall be calibrated within 30 days prior to the start of any new test program. Instruments used in calibration shall have at least five times the accuracy of the instrument being calibrated. Calibrated reference instruments of lesser accuracy than standard, which are not used for any other purpose, may be used for the required periodic check of test instruments. The calibration of all instruments shall be traceable to the National Bureau of Standards.

Instruments shall be calibrated at the frequencies at which they are going to be used.

18.3 SELECTION OF INSTRUMENTS. Prior to connecting instruments into circuits, thought should be given to the range of readings which will be required. The range of the instrument should be great enough so that it will not be burned out during normal use, but the range should not be so great that the reading will be so low on the scale as to make the accuracy of reading unreliable. On analog dc instruments, the readings shall not be made on the lower 15 percent of the scale. On analog ac instruments, the readings shall not be made on the lower one-third of the scale.

Instrumentation accuracy shall be not less than +0.5 percent of the full scale value, unless otherwise specified herein or in the requirement document.

Some instruments have leads which are calibrated for use with particular instruments. These instruments shall always be used with the leads provided or the calibrations will be useless. The calibrated leads shall not be used for any purpose other than that for which the leads were calibrated.

Some instruments have ON-OFF hold-down buttons on their cases. These instruments usually are designed for intermittent use and should not be connected into live circuits with the buttons taped down so that the meters read continuously. Serious overheating and possible destruction of the instrument may occur if this precaution is ignored. Instrumentation shall be used in accordance with its manufacturer's recommendations, especially where pre use "warm up" is recommended.

Care should be taken to keep unshielded instruments out of any stray fields to avoid errors and permanent damage to instruments.

18.4 VOLTMETERS. Since voltmeters are potential measuring devices, they are placed "across the line" in use. Care in selection of voltmeters is necessary since these instruments consume power in operation. Where measurement of potential of high impedance or high resistance circuits is required, high resistance (low current drain) instruments must be used or the instrument power drain may disturb the basic circuit. However, except for the smallest generator sets, the power consumption of a voltmeter may be considered negligible.

18.4.1 AC VOLTMETERS. Care in selection of the proper range should be exercised. When in doubt, use the highest range instrument available just to approximate the range needed for the measurement.

When the range of the available voltmeter is not adequate for the potential to be measured, or when instrument isolation is required, a potential transformer may be used. When a potential transformer is used, a piece of paper with the multiplying factor, resulting from the transformer ratio, shall be affixed to the indicating instrument. More than one instrument may be connected to one potential transformer, but the rated burden of the transformer shall not be exceeded.

In some instances, the range of an ac voltmeter may be extended by use of a multiplier which is a non-inductively wound calibrated resistor.

It should be emphasized that the voltage sensing connections for the voltmeter or the primary of the potential transformer shall be connected immediately prior to the load contactor or circuit interrupter of the generator set when performing the methods of EGSA 107T. This is to standardize the voltage measuring points and to avoid voltage drops due to line loss when the set is operating under load. To connect the voltage sensing lines to the load side of the load contactor would open circuit all voltage sensing when the load contactor was open.

When numerous readings of potential of different circuits must be made, it is recommended that a switching device be used to facilitate the use of a single voltmeter. Note that the switch points must be of the non-shorting type and the voltage rating of the switch must be in excess of the maximum voltage to be measured.

When recording meters are used, the clock drive should be connected to a stable source of power, such as public utility supply, so as to eliminate paper speed changes and bias voltage variations during operation. When multiple recording units are used to measure different values, their clock devices shall be connected to the same power supply. When mechanical clocks are used as drives, it is desirable to use mechanical ties between the recorder, so that the paper speeds will be the same.

18.4.2 DC VOLTMETERS. It should be noted that polarity is important when D'Arsonval instruments are used. When extreme accuracy is required, such as during calibration, and a dynamometer-type instrument is used, readings should be taken with the leads direct and reversed and the result should be taken to be the average of the two readings.

Most of the notes contained in paragraph 18.4.1 (ac voltmeters) also apply to dc voltmeters but it should be noted that potential transformers cannot be used to extend the range of the dc

voltmeter. Transfer switches, to measure voltages of different circuits with one voltmeter, are more complicated since polarity must be correct for all connections.

18.5 AMMETERS. Since ammeters are current measuring devices, they are placed "in the line" and never "across the line". When ammeters are used they should be protected by short circuiting switches so that transient current surges will not damage the instrument.

18.5.1 AC AMMETERS. When the range of the instrument is not adequate to measure the current in the line or when the voltage is above that to which the instrument can safely be connected directly in the line, current transformers, for testing purposes, having a five-ampere instrument side and multiple taps for the line side shall be used. Where the line current is greater than the taps provided, turns may be passed through the core of the transformer.

When multiple readings of several line currents are required, it is usually preferable to use a transfer switch. This can be readily obtained since most generator sets are equipped with such a device. At any position, the selector switch must short the current transformers not in use in that position. Moreover, when turned, it must short out all of the transformers before changing the position of the ammeter in the circuit.

18.5.2 DC AMMETERS. A shorting switch is desirable across the instrument to protect it from transient surges of current. The instrument is essentially a millivoltmeter which measures the drop across a known resistance (the shunt). Multiple shunts may be arranged in a single case.

18.6 WATTMETERS. Some wattmeters have a compensating circuit in their mechanisms which corrects the indication for the moving coil losses. However, this correction is negligible when a wattmeter is used to measure generator output power. The range of wattmeters can be extended through the use of current transformers, potential transformers or both. When using transformers, the indicated meter reading must be multiplied by the transformer ratio and the meter ratio to determine the actual power.

18.6.1 MEASUREMENT OF SINGLE-PHASE WATTAGES. The range of the wattmeter may be extended by the use of a potential transformer and a current transformer.

Caution: When this circuit is used the current winding of the wattmeter must be rated for the line to ground voltage of the circuit.

The plus-or-minus binding post of the potential circuit must always be connected to the same side of the circuit under test which contains the current coil of the wattmeter, to have the current and potential coils at the same potential, thus eliminating the electrostatic attraction between them. When current or potential transformers are used, it is necessary to connect the plus-or-minus binding post of the potential circuit to the plus-or-minus binding post of the current circuit. When both potential and current transformers are used, the connection between the plus-or-minus binding posts should be grounded. When instrument transformers are used in the measurement of power, they must maintain the phase relationship between the input and output of the transformer at zero degrees. Any time instrument transformers are used on circuits exceeding 750 volts, one terminal of the transformer secondaries must be grounded through a wire

equivalent in current carrying capacity to No. 12 AWG copper or larger (see Rules 93.B.3, 97.A.3, and 150.C of the National Electrical Safety Code ANSI C2.)

18.6.2 MEASUREMENT OF POLYPHASE WATTAGES. A single-element wattmeter may be used to measure the power of a balanced, three-wire, polyphase system. This can be accomplished by means of a three-resistor network connected to form an artificial wye with the potential circuit of the instrument as one section of the network. The other two sections each have the same resistance as the instrument, and the voltage across the instrument then is equal to the phase voltage (or the voltage to the artificial neutral). The current circuit of the instrument indicates the power of one phase. The actual wattage will be three times the meter reading.

It is also possible to measure the power in a balanced three-phase, three-wire system by connecting a single-element wattmeter. It should be noted that the wattmeter current coils should be connected for two times the current connection for one transformer. Thus, if five-ampere transformer secondaries are used, the current coils of the wattmeter should be connected for 10 amperes. If the wattmeter reading (adjusted for the 10-ampere connection) is multiplied by the transformer ratio, the result will be the polyphase wattage.

Where unbalanced voltages or currents are encountered, it is recommended that more than one meter be used to measure the power in a polyphase system. These meters can be combined in one unit to form a direct reading polyphase wattmeter. Blondel's Theorem states that "true power can be measured by one less wattmeter element than the number of wires of the system, provided that one wire can be made common to all element potential circuits". If both instruments deflect toward the top of the scale, when connected as shown, the power is the sum of their indications. If one instrument deflects negatively, which will be the case when the power factor is below 50 percent, the reversing switch of that wattmeter should be changed and the power will be the reading of the first instrument minus the reading of the reversed instrument.

This instrument will not read correctly on an unbalanced three-phase, four-wire system.

When the wattage of a four-wire, three-phase unbalanced system is required, three wattmeters shall be used. The sum of the three readings is the required wattage.

In some instances it may be necessary to measure the wattage of a single-phase system with a polyphase wattmeter. Depending on the connection, the wattmeter can read directly, or the wattmeter reading can be multiplied by the ratios of both the current and potential transformers.

18.7 POWER FACTOR. The power factor of a single-phase circuit can be determined by using a single-phase wattmeter and voltmeter and ammeter. Since the wattmeter reads EI cos ▼ (volts x amperes x power factor), if the wattmeter reading is divided by the product of the voltmeter reading times the ammeter reading, the result will be power factor (cos ▼).

$$\frac{\text{Watts}}{\text{Volts x Amps}} = \text{power factor}$$

Caution: The resultant power factor must be within the wattmeter operating range.

This value may be read directly by using a single-phase power factor meter. When instrument transformers are used in the measurement of power factor, they must maintain the phase relationship between the input and output of the transformer at zero degrees.

When the power factor of a balanced three-phase system is desired, it may be computed by using a polyphase wattmeter, a voltmeter and an ammeter. The wattmeter reads ↗3E Line I phase Cos ▼ (↗3 x line-to-line volts x phase current x power factor). The wattmeter reading divided by the product of the voltmeter reading and the ammeter reading and ↗3 will be the power factor (cos ▼). This value may be obtained directly by the use of a polyphase power factor meter, with potential transformers, with current transformers, and with both current and potential transformers. Care must be taken to see that the wiring of a polyphase power factor meter is correct, or the reading will be completely erroneous. A check always should be made against the computed value of the power factor, as given above, the first time the instrument is used in a circuit.

Since the system must be balanced (equal voltages, currents, and power factors on all three phases), to use a polyphase power factor meter, a single-phase instrument used between one line and neutral, also may be used to indicate the system power factor.

The power factor of an unbalanced polyphase system is a complicated, controversial subject, beyond the scope of this handbook, and it is not required in any of the test methods.

18.8 REACTIVE VOLT-AMPERES. Occasionally it is necessary to determine the reactive volt-amperes of a polyphase system. This may be accomplished in a balanced three-phase system by using a single-element wattmeter. The scale reading must be multiplied by ↗3 to get the values of VAR's.

The use of a polyphase wattmeter with a combined phase-shifting autotransformer may be used on a three-phase, three-wire system whose voltages are balanced but whose currents are not.

18.9 FREQUENCY. Frequency meters are connected in circuits in a manner similar to a voltmeter.

The accuracy of frequency meter readings is influenced by the waveform of the circuit potential. When the waveform differs substantially from that of a sine wave, the readings will be erroneous. When it is desired to read the frequency of non-sinusoidal waves, special instruments, containing band pass filters, must be used. Since the specifications for generators require a low distortion waveform, these special instruments are not needed when the frequency is determined directly from the line voltage of the generator.

Caution: To prevent damage to frequency meters, they should only be electrically connected to the line when the line frequency is known to be within the range of the instrument. Most frequency meters are equipped with an on-off switch for this purpose.

18.10 LOAD INSTRUMENTATION. Instruments can be used in combination to measure the load conditions and field voltage and current of a generator. In that case, no connections will be made to the fourth wire (neutral).

TEST METHOD 19

ENGINE PRESSURE MEASUREMENTS

19.1 GENERAL. The location of the pressure tap is of importance in the repeatability of engine pressure measurements.

19.2 AIR INTAKE PRESSURE.

19.2.1 SPARK IGNITION ENGINES. The intake manifold pressure shall be measured by a manometer or pressure transducer connected to a pressure tap located approximately 2 inches from the carburetor flange. On small engines where a pressure tap may interfere with carburetion, the intake manifold pressure data may be omitted at the discretion of the testing agency. The pressure shall be measured in inches of water (H_20) or mercury (Hg).

19.2.2 COMPRESSION IGNITION ENGINES. Pressure of the intake air in the manifold for naturally aspirated engines shall be measured by a manometer or pressure transducer connected to a pressure tap near the inlet flange of the manifold. For engines with scavenging air blowers, turbochargers, or superchargers, the air pressure shall be measured by a manometer connected to a pressure tap located on the discharge side of the blower. The pressure shall be measured in inches of water (H_2O) or mercury (Hg).

19.3 EXHAUST GAS PRESSURE. The mean exhaust gas pressure shall be measured by a manometer or pressure transducer connected to a tap located approximately 2 inches beyond the outlet flange of the exhaust manifold or turbocharger. The pressure shall be measured in inches of mercury (Hg) or water (H_20). The back pressure imposed by the laboratory or manufacturer's plant exhaust system during tests at rated net continuous load and speed shall not be less than that existing at the same load and speed with the set exhausting directly to the atmosphere through its own exhaust system, and will be increased above this minimum value if a higher test pressure is specified in the requirement documents.

TEST METHOD 20

PRESSURE AND TEMPERATURE CORRECTIONS TO ENGINE DATA

20.1 GENERAL. Ambient air pressure, water vapor pressure and the intake air temperature variations have considerable effect on the operational characteristics of engines. It is necessary to correct for these variations in order to assure that engine output data is uniform.

20.2 MEASUREMENT OF ATMOSPHERIC MOISTURE. The quantity of moisture mixed with the air under different conditions of temperature and degrees of saturation may be measured in several distinctly different ways. Many of these, however, are not practicable methods for daily observations, or are not sufficiently accurate. Probably the most convenient of all methods and the one most generally employed is to observe the temperature of evaporation, that is, the difference between the temperatures indicated by wet-bulb and dry-bulb thermometers. One of the most commonly used instrument for this purpose is the sling psychrometer (also called "whirled psychrometer"). In special cases, rotary fans or other means may be employed to move the air rapidly over the thermometer bulbs. In any case, satisfactory results cannot be obtained from observation in relatively stagnant air. A strong ventilation is absolutely necessary to accuracy.

Additional information on atmospheric moisture measurement can be found in ANSI/ASHRAE 41.6 and in the ASHRAE brochure on psychrometry.

20.3 SLING PSYCHROMETER DESCRIPTION. This instrument consists of a pair of thermometers, provided with a handle, which permits the thermometers to be whirled rapidly, the bulbs being thereby strongly affected by the temperature of and moisture in the air. The bulb of the lower of the two thermometers is covered with thin muslin, which shall be wet at the time an observation is made.

20.3.1 MAINTENANCE OF THE WET BULB. The muslin covering for the wet bulb shall be kept clean and in good condition. The evaporation of the water from the muslin always leaves in its meshes a small quantity of solid material, which eventually stiffens the muslin so that it does not readily become wet after being dipped in water. To minimize this problem, use pure distilled water and renew the muslin frequently. New muslin must always be washed to remove sizing (starch) and other potential contaminants before being used. A small rectangular piece of muslin wide enough to go one and one-third times around the bulb, and long enough to cover the bulb and that part of the stem below the metal back, shall be thoroughly wetted in clean water, and neatly fitted around the thermometer. It shall then be tied first around the bulb at the top, using suitably strong thread, then looped to form a knot around the bottom of the bulb, just where it begins to round off. As this knot is drawn tighter and tighter the thread will slip off the rounded end of the bulb and neatly stretch the muslin covering with it, at the same time securing the latter at the bottom.

20.4 MAKING AN OBERVATION USING THE SLING PSYCHROMETER. The wet bulb shall be thoroughly saturated with water by dipping it into a small cup or wide-mouthed bottle. The thermometers shall then be whirled rapidly for 20 seconds; stopped and quickly read, the wet bulb first. These readings shall be recorded, the psychrometer immediately whirled again and a second set of readings taken. This is repeated three or four times, or more, if necessary, until at least two successive readings of the wet bulb agree, thereby showing that it has reached its lowest temperature.

A minute or more is generally required to secure the correct temperature. When the air temperature is near the freezing point, the temperature of the wet bulb may fall several degrees below freezing point, but the water will still remain in the liquid state. No error results from this, provided the minimum temperature is reached. If, however, as frequently happens, the water suddenly freezes, a large amount of heat is liberated, and the temperature of the wet bulb immediately becomes 32°. In such cases it is necessary to continue the whirling until the ice-covered bulb has reached a minimum temperature.

20.4.1 WHIRLING AND STOPPING THE PSYCHROMETER. It is difficult to effectually describe these movements. The techniques can only be learned by practice. The arm is held with the forearm about horizontal, and the hand well in front. A peculiar swing starts the thermometers whirling, and afterward the motion is kept up by only a slight but very regular action of the wrist, in harmony with the whirling thermometers. The rate should be a natural one, so as to be easily and regularly maintained. If too fast, or irregular, the thermometers may be jerked about in a violent and dangerous manner. The stopping of the psychrometer, even at the very highest rates, can be perfectly accomplished in a single revolution, when one has learned the technique. This can only be acquired by practice. It consists of a quick swing of the forearm by which the hand also describes a circular path and follows after the thermometers in a peculiar manner that wholly overcomes their circular motion without the slightest shock or jerk. As an alternative stopping method, the thermometers may, without very great danger, be allowed simply to stop themselves; the final motion in such a case will generally be quite jerky, but, unless the instrument is allowed to fall on the arm, or strikes some object, no injury should result.

20.4.2 SPECIAL PROCEDURES FOR USING THE PSYCHROMETER IN SUNLIGHT. While the psychrometer will give quite accurate indications, even in the bright sunshine, observations made in the sunshine are not without some error, and, where greater accuracy is desired, the psychrometer should be whirled in the shade of a building or tree, or, as may sometimes be necessary, under an umbrella. In all cases there should be perfectly free circulation of the air, and the observer should face the wind, whirling the psychrometer in front of a body. It is a good plan, while whirling, to step back and forth a few steps to further prevent the presence of the observer's body from giving rise to erroneous observations.

20.5 CORRECTING INTAKE MANIFOLD PRESSURE OBSERVATIONS. The moisture vapor pressure for a given combination of temperature and relative humidity shall be determined by obtaining wet-bulb and dry-bulb temperatures with a sling psychrometer. The psychrometer shall be operated near the engine air intake and the readings obtained shall be used in conjunction with the ASHRAE Handbook 1981 Fundamentals, chapter 5 and the Psychrometric Tables of chapter 6 therein, to obtain the moisture vapor pressure. Subtract the moisture vapor pressure from the observed value of the manifold pressure to obtain the dry absolute manifold pressure at the observed temperature. The dry absolute manifold pressure at the observed temperature shall be converted to a dry absolute manifold pressure at the standard carburetor inlet temperature of 60 oF (15.5 °C) by applying the following formula:

$$\text{D.A.M.P. at } T_S = \text{D.A.M.P. at } T_O \left[\frac{460 + 60}{T_O + 460}\right]$$

Where:

D.A.M.P. is the Dry Absolute Manifold Pressure.

T_S is the standard carburetor inlet air temperature (60 ^{o}F).

T_O is the observed temperature in ^{o}F.

20.6 CORRECTING MAXIMUM POWER VALUES. All values of observed maximum engine generator set output power shall be corrected to standard conditions of pressure and temperature (sea level and 60 ^{o}F), unless otherwise specified in the procurement document. Correct the observed engine generator set output value by applying the following formula:

$$\text{Corrected watts} = (\text{Observed watts}) \frac{29.92}{B-E} \nearrow \frac{460+T}{460 + 60} \quad \text{(For sea level and 60° F)}$$

Where: B is the barometer inches of mercury (corrected for temperature).

E is the water vapor pressure (inches of mercury).

T is the intake air temperature (^{o} F.).