TEST METHOD 61

CIRCUIT INTERRUPTER TEST (SHORT CIRCUIT)

61.1 General. A circuit interrupter is connected between the generator voltage reconnection system and the generator set output terminals to disconnect the generator output from the load and also to protect the generator from a short circuit. The circuit interrupter is operated from a current sensor either internal or external to the interrupter.

61.2 Apparatus. Instrumentation for measuring load conditions shall be as described in EGSA 107T . In addition, the test recording equipment shall be described in EGSA 107T , Test Method 1, 4, and 6, a non-inductive shunt, a short-circuiting switch.

61.3 Procedure.

61.3.1 Preparation for test.

a. Connect the load and instrumentation for the voltage connection and frequency specified in the contract.

b. Connect the shunt, test recording equipment, and short-circuiting switch as illustrated in figure 61-I.

61.3.2 Test.

a. Start and operate the generator set at rated voltage, rated frequency and rated load.

b. Set the test recording equipment time marker to a minimum of 0.01 seconds or use a 60 hertz timing trace.

1. For ac generators set adjust the test recording equipment such that the individual peaks of the current waveform are clearly visible and adjust the peak-to-peak rated current amplitude to a minimum of 0.5 inch (or approximately 12 millimeters).

2. For dc generators set adjust the test recording equipment such that the timing markers or timing trace is clearly visible and adjust the no load-rated load trace excursion to at least 0.5 inch (or approximately 12 millimeters).

c. Prior to closing the short-circuiting switch, record a portion of the steady state load current for calibration. With the same load conditions record all instrument readings.

d. With the test recording equipment still recording the steady state current, close the short-circuiting switch.

CAUTION: If the circuit interrupter fails to operate within the specified time, remove the short circuit to prevent damage. Note the failure to operate on the data sheet.

e. If the generator set contains a short-circuit malfunction indicator, check and record its indication.

f. Should the generator set control circuitry contain a specified time delay to prevent the circuit interrupter from operating on short duration faults, the circuitry shall be checked as follows:

1. Open the short-circuiting switch and reapply rated load.

2. Operate the test recording equipment as in b above.

3. Momentarily close and open the short-circuiting switch, being certain that the switch

4. Record on the data sheet if the circuit interrupter operated and the indication of the malfunction indicator (if applicable).

g. Repeat steps a thru f above for each possible short circuit condition (L1-L0, L2-L3, L1-L2-L3, etc.). Allow the generator set to cool at rated load for a minimum of 15 minutes between short circuits.

h. Repeat steps a thru g above for each voltage connection and frequency specified in the contract.

512.1.4 Results.

a. From the waveforms taken in 61.3.2d, determine the time between the indicated closure of the short-circuiting switch and the opening of the circuit interrupter (see figure 61-II).

b. Calculate the short-circuit current using the peak-to-peak amplitudes of the current trace and the steady state ammeter reading prior to application of the short circuit load (see figure 61-II).

c. For sets having a time delay, use the waveforms taken in 512.1.3.2f and determine if the circuit interupter actuated upon application of the momentary short circuit load.

d. Tabulate the above results and the malfunction indicator indication for each line connection at each voltage connection and frequency and compare the results with the contract requirements (see figure 61-III).

61.5 Contract requirements. The following items must be specified in the individual contract:

a. The time for the circuit interrupter to operate after the short-circuit load is applied.

b. The current value, in percent of rated current, at which the circuit interrupter shall operate, if necessary.

c. Voltage connection(s) and frequency(ies) at which this method is to be performed.

d. Short circuit conditions (L1-L2, L1-L2-L3, etc.) if other than as specified herein.

e. Short-circuit malfunction indicator requirements.

f. Circuit interrupter delay time, if applicable.

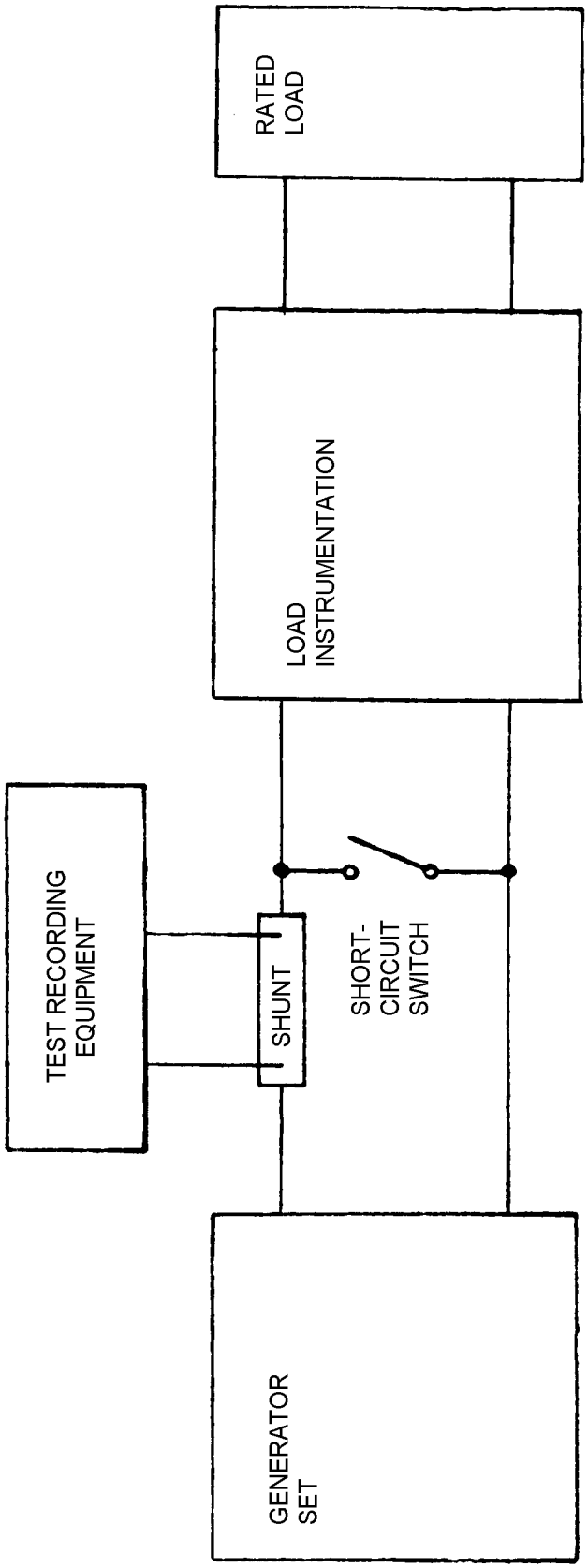

FIGURE 512.1-I. APPARATUS CONNECTION FOR CIRCUIT INTERRUPTER (SHORT-CIRCUIT) TEST.

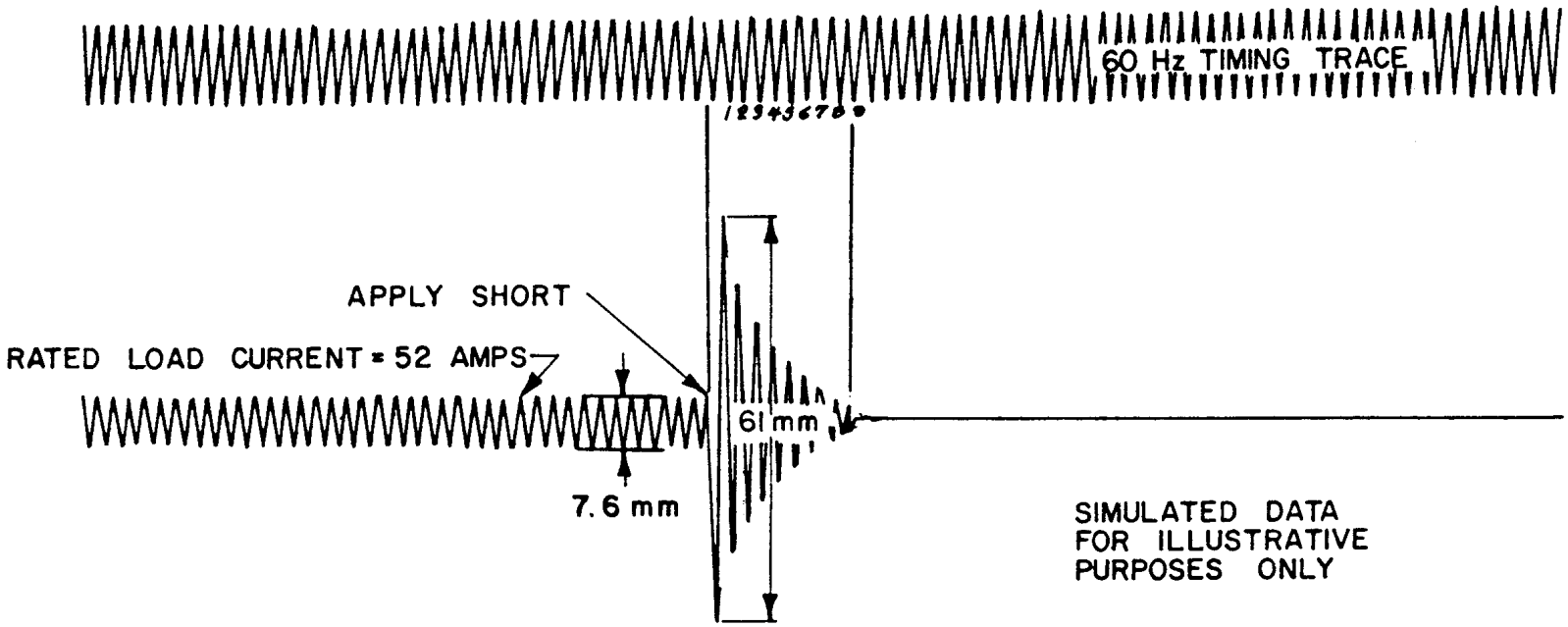

CIRCUIT INTERRUPTER OPERATED IN 9.0 CYCLES OR 9 CYCLES X $16.7 \frac{MS}{CYCLE}$ = 150 MILLISECONDS

SHORT CIRCUIT LOAD CURRENT = $\frac{61\,mm}{7.6\,mm}$ X 52 AMPS = 417 AMPS

FIGURE 512.1-II. Portion of an waveform showing circuit interrupter operation and calculations.

TEST METHOD 62

CIRCUIT INTERRUPTER TEST

(OVERLOAD CURRENT)

62.1 General. A circuit interrupter is connected between the generator voltage reconnection system and the generator output terminals to disconnect the generator output from the load and to protect the generator from a sustained overload current. The circuit interrupter is operated from a current sensor either internal or external to the interrupter.

62.2 Apparatus. Instrumentation for measuring load conditions and field voltage and current shall be as described in EGSA 107T. In addition, the test recording equipment shall be described in EGSA 107T, Test Methods 1, 4, and 6, a non-inductive shunt, and a stopwatch (or similar timing device).

62.3 Procedure.

62.3.1 Preparation for test. Connect the load and field instrumentation for one voltage connection and frequency specified in the contract.

62.3.2 Test.

CAUTION: If the circuit interrupter fails to operate within the time specified in the contract at any time during the performance of this method, manually open the circuit interrupter and reduce the load impedance to rated value before reclosing the circuit interrupter. Record on the data sheet the failure of the interrupter to operate and the total elapsed time the overload was on the set.

a. Start and operate the generator set at rated voltage, rated frequency and rated load.

b. Allow the generator set to stabilize at rated load, voltage and frequency. During this period, readings of the load and field instrumentation shall be recorded at minimum intervals of 10 minutes. If necessary, adjustments to the load, voltage and frequency may be made to maintain rated load at rated voltage and frequency. Adjustment to the load, voltage or frequency shall be noted on the data sheet. Unless otherwise specified in the contract, stabilization shall be considered to have occurred when fourconsecutive voltage and frequency recorded readings of the generator line output either remain unchanged or have only minor variations within plus or minus one-half the long-term stability bandwidth with no evident continued increase or decrease in value after the last adjustment to the load, voltage or frequency has been made.

c. In one continuous operation, increase the load current to the overload current value specified in the contract (the increase in current may be accomplished by any practical means, e.g. reactively).
Note: The frequency shall be maintained at rated conditions, the load current shall be balanced equally among the phases. Simultaneously with the load current increase, start the stopwatch (or similar timing device).

d. Record all load instrumentation and the time, in seconds, required for the circuit interrupter to operate (see figure 62-I).

e. If the generator set contains an overload malfunction indicator, check and record its indication.

f. Allow the generator set to cool at rated load for a minimum of 15 minutes.

g. Repeat steps c thru f except that the load current is increased to the overload current value in Phase A only. Phases B and C remain at the rated load current value of wye connections orequally share the increase for delta connections.
(This step is not applicable for 2 wire single phase or dc sets).

h. Repeat step g except that the load is increased to the overload current value in phase B only. Phases A and C remain at the rated load value of current.

i. Repeat step g except that the load is increased to the overload current value in phase C only. Phases A and B remain at the rated load value of current.

j. If the contract requires circuit interrupter operation at overload currents other than that used in c thru i above, repeat a thru i above for the specified overload current(s).

k. Repeat a thru i above for each voltage connection and frequency specified in the contract.

1. If the contract requires that the circuit interrupter not trip at a specified load above 100 percent of rated load, load the generator set to the value specified and operate at this load for a two hour period.

62.4 Results. The data sheets shall show, as a minimum, whether or not the circuit interrupter operated, the time(s) required for the interrupter to operate, the indication of the malfunction indicator, the overload load condition(s) and the stabilization data. Compare the time(s) required for the circuit interrupter to operate with the requirements of the contract.

62.5 Contract requirements. The following items must be specified in the individual contract:

a. The time(s), in seconds, for the circuit interrupter to operate after the overload(s) is (are) applied.

b. The percent overload trip current(s) at which this method is to be performed.

c. The percent overload hold current(s) at which this method is to be performed, if applicable.

d. Voltage connection(s) and frequency(ies) at which this method is to be performed.

e. Overload malfunction indicator requirements.

TEST METHOD 63

CIRCUIT INTERRUPTER TEST

(OVERVOLTAGE AND UNDERVOLTAGE)

63.1 General. To protect the load from generator malfunction (e.g. overvoltage or undervoltage) a circuit interrupter is connected between the generator voltage reconnection system and the generator output terminals. A voltage sensing circuit operates the circuit interrupter if an overvoltage or undervoltage condition occurs and thus protects the load from a generator malfunction.

63.2 Apparatus. Instrumentation for measuring voltage and frequency shall be as described in EGSA 107T . In addition, the test recording equipment shall be described in EGSA 107T , Test Method 1,4, and 6, and the voltage divider transformer network (figure 63-I) will be required.

63.3 Procedure.

63.3.1 Procedure I. (Overvoltage)

63.1.1 Preparation for test.

a. Locate and disconnect the input circuit to the input terminals of the overvoltage protective sensing circuit and connect the apparatus as illustrated in figure 63-I for the voltage connection and frequency specified in the contract.

b. Connect the frequency meter to the output terminals of the generator set.

63.1.2 Test.

a. Start and operate the set at rated frequency and no load.

b. Close the switch (see figure 63-I) and use resistance, R1 to adjust the voltage to the overvoltage value specified in the contract (Voltmeter Number 1). If the set has provisions for shutdown or removal of excitation from the generator upon an overvoltage condition, it will be necessary to temporarily deactivate this provision to permit adjustment of the overvoltage value. This may be done by activation of the "protective by-pass" (Battle Short) switch, if provided. Do not deactivate the circuit interrupter trip circuitry.

c. Open the switch, reset the overvoltage circuit and adjust the resistance, R2, until the Voltmeter Number 2 reads rated voltage.

d. Repeat steps b and c to assure that the specified overvoltage and rated voltage settings are correct.

e. Adjust the test recording equipment such that the individual waveform peaks are clearly visible. Set the timing lines to a minimum of 0.01 seconds per line or use a 60 Hertz timing trace. Adjust the trace peak-to-peak amplitude to a minimum of one inch (or 25 millimeters).

f.. Read and record both voltmeter readings.

g. With the test recording equipment still recording and the circuit interrupter closed, close the switch. (See figure 63-I).

h. Reactivate the shutdown provision if used.

i. If the generator set contains an overvoltage malfunction indicator, check and record its indication.

j. If set shutdown or removal of generator excitation is required, record whether or not the shutdown or generator excitation removal occurred.

k. Open the switch, reset the overvoltage circuit if necessary, restart the set if required, and close the circuit interrupter.

1. Repeat steps e thru k above two additional times.

63.3.2 Procedure II. (Undervoltage)

63.3.2.1 Preparation for test.

a. Locate the input terminals of the undervoltage sensing circuit and connect the apparatus as illustrated in figure 63-I.

b. Repeat step b of 63.3.1.1.

63.3.2.2 Test.

a. Start and operate the set at rated frequency and no load.

b. Close the switch (see figure 63-I) and use the resistance, R1, to adjust the voltage to the rated value.

c. Open the switch and adjust the resistance, R2, until Voltmeter Number 2 reads the undervoltage value specified in the contract. If the set has provisions for shutdown or removal of excitation from the generator upon an undervoltage condition, it

will be necessary to temporarily deactivate this provision for this adjustment. Do not deactivate the circuit interrupter trip circuitry. When two or more undervoltage values are specified, this test shall be repeated for each undervoltage value. In addition, if the contract specifies a voltage bandwidth in which the undervoltage protection device shall not operate instantaneously, operation within this bandwidth shall also be checked.

d. Repeat steps b and c above to assure that the specified undervoltage and rated voltage settings are correct.

e. Adjust the test recording equipment such that the individual waveform peaks are clearly visible. Set the timing lines to a minimum of 0.01 seconds per line or use a 60 Hertz timing trace. With the switch open, adjust the trace peak-to-peak amplitude to a minimum of one inch (or 25 millimeters).

f. With the set operating and the circuit interrupter and the switch open, read and record both voltmeter readings (see figure 63-II).

g. Close the switch and circuit interrupter.

h. Reactivate the set shutdown provision if used.

i. With the test recording equipment still recording, open the switch.

j. After allowing sufficient time for the circuit interrupter to operate, check and record the indication of the undervoltage malfunction indicator if the set contains one.

k. If set shutdown or removal of generator excitation is required, record whether or not the shutdown or generator excitation removal occurred.

1. Close the switch, reset the undervoltage circuit if necessary, restart the set if required, and close the circuit interrupter.

m. Repeat steps e thru 1 above two additional times.

n. If the undervoltage protection circuitry contains a time delay to prevent circuit interrupter operation on a momentary undervoltage condition, the circuitry shall be checked as follows:

   1. With the test recording equipment operating, momentarily open and close the switch making sure that the switch is not closed for a period of time equal to or longer than the specified delay time.

   2. Record on the data sheet if the circuit interrupter operated and the indication of the malfunction indicator (if applicable).

o. If more than one undervoltage value is specified in the contract, repeat Test Method 63.2.1 and 63.3.2.2 for each value specified.

63.3.3 Repeat procedure. Repeat Test Method 63.3.1 and 63.3.2 at each of the voltage connections and frequencies specified in the contract.

63.4 Results.

a. From the waveforms made in 63.3 determine and tabulate the time between the application of the overvoltage and operation of the circuit interrupter for each application of overvoltage.

b. From the waveforms made in 63.3 determine and tabulate the time between the application of the undervoltage and operation of the circuit interrupter for each application of undervoltage.

c. For sets having a time delay, use the waveforms taken in 63.3.2.2 and determine if the circuit interrupter actuated upon application of a momentary undervoltage.

d. Compare these results with the requirements of the contract.

63.5 Contract requirements. The following items must be specified in the individual contract:

a. The value of overvoltage in volts and time in seconds required for the circuit interrupter to operate after application of the overvoltage.

b. The value(s) of undervoltage in volts and time(s) in seconds required for the circuit interrupter to operate after application of the undervoltage.

c. Voltage connection(s) and frequency(ies) at which this method is to be performed.

d. Overvoltage and undervoltage malfunction indicator requirements.

e. Conditions of set shutdown or removal of generator excitation as applicable.

f. Circuit interrupter delay time if applicable.

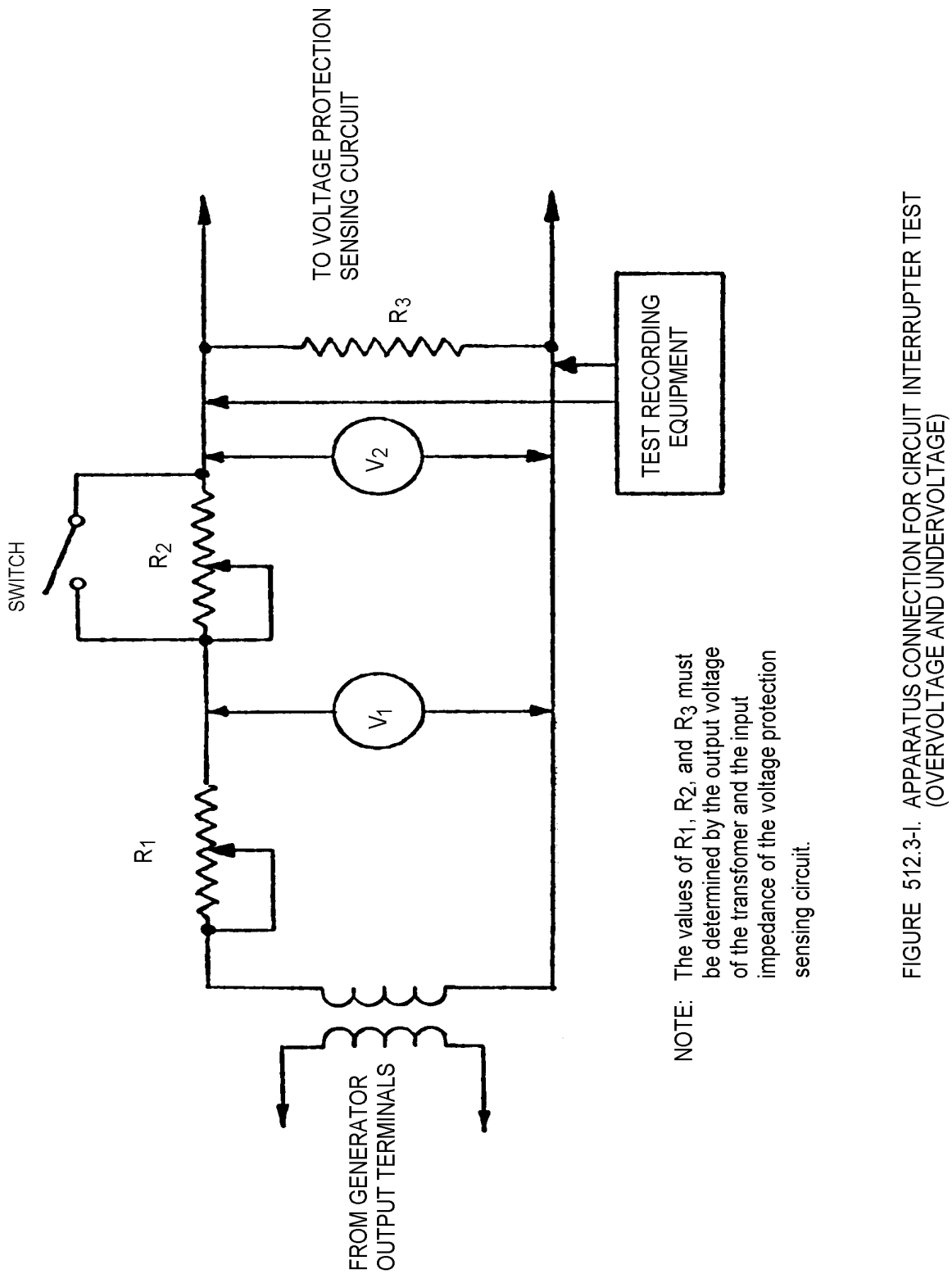

Figure 63-1 Apparatus for Circuit Interuptor Test (Overvoltage and Undervoltage)

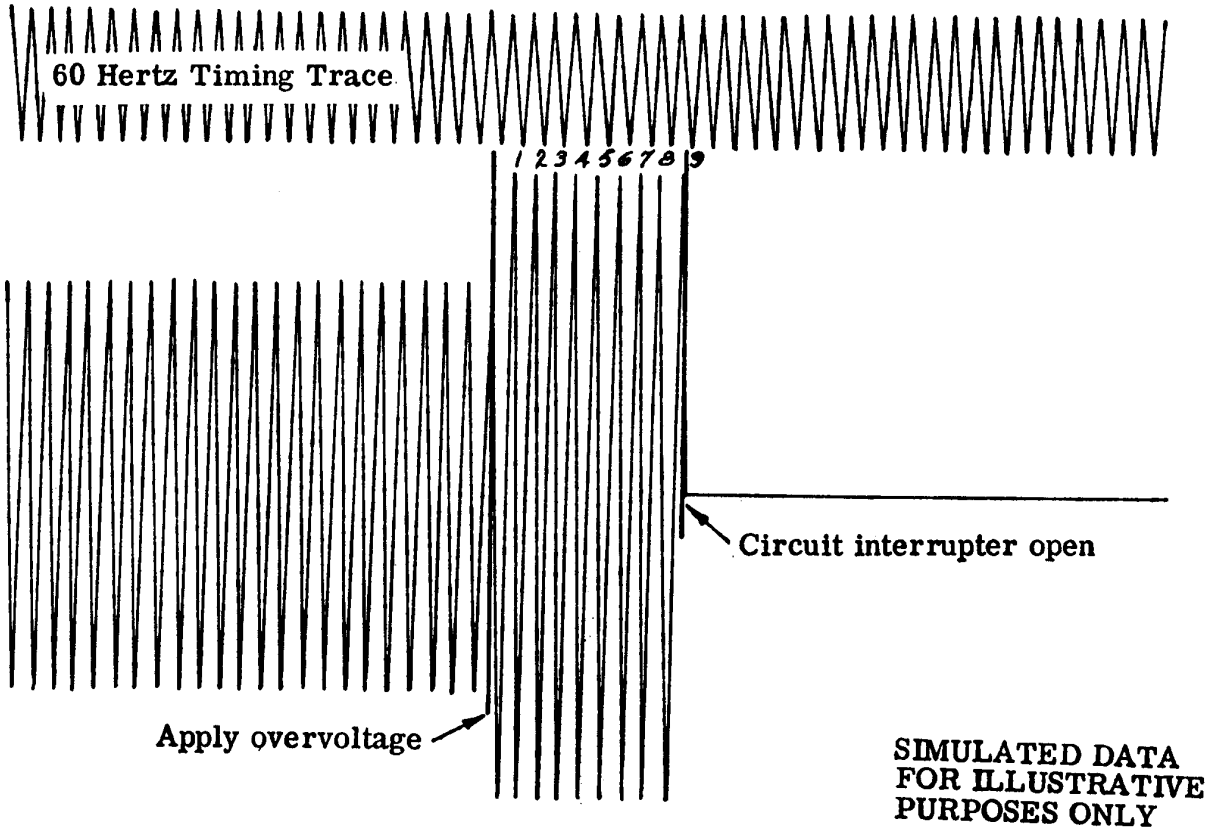

CIRCUIT INTERRUPTER OPERATED IN 9.0 CYCLES

$9 \text{ CYCLES} \times \frac{16.7 \text{ mS}}{\text{CYCLE}} = 150$ MILLISECONDS

FIGURE 63-II. Portion of an waveform showing circuit interrupter operation upon application of an overvoltage.

TEST METHOD 64

INDICATING INSTRUMENT TEST

(ELECTRICAL)

64.1 General. Accurate set instrumentation is necessary for determination of proper operation of the generator set and to prevent set overload or connected equipment problems.

64.2 Apparatus. Instrumentation for measuring load conditions and ambient temperature shall be as described in EGSA 107T. Electrical instrumentation used for this test shall have an accuracy of ±0.5 percent of reading or better.

64.3 Procedure.

64.3.1 Preparation for test.

a. Connect the load instrumentation for the applicable voltage connection and frequency.

b. Set the mechanical zero, if possible, on the applicable set instruments. The set instruments shall not be readjusted once the test is in progress.

NOTE: During this method the set instruments should be set at the desired value and the actual value read from the standard instruments.

64.3.2 Test.

a. Start and operate the set at no load and rated frequency.

b. Record all set and standard instrument readings concurrently.

c. Reduce the frequency (if a frequency adjust device is provided) to obtain a panel frequency indication at the extreme low end of the meter operating range (the lowest major scale division for the frequency condition tested) or to a value just prior to the activation of the under frequency protective device (if an under frequency protective device is provided).

d. Record all set and standard instrument readings concurrently. (see figures 64-I and 64-II).

e. Increase the frequency to obtain a set frequency indication at the extreme high end of the meter operating range (the highest major scale division for the frequency condition tested) or to a value just prior to the activation of the overspeed protective device.

f. Record all set and standard instrument readings concurrently.

g. Reduce the voltage (if a voltage adjust device is provided) to obtain a panel voltage indication at the extreme low end of the meter operating range (the lowest major scale division for the voltage condition tested) or to a value just prior to the activation of the undervoltage protective device (if an undervoltage protective device is provided).

h. Record all set and standard instrument readings concurrently.

i. Increase the voltage to obtain a set voltage indication at the extreme high end of the meter operating range (the highest major scale division for the voltage condition tested) or to a value just prior to the activation of the overvoltage protective device.

j. Record all set and standard instrument readings concurrently.

k. Repeat a thru j except at 25 percent rated load.

1. Repeat a thru j except at 50 percent rated load.

m. Repeat a thru j except at 75 percent rated load.

n. Repeat a thru j except at 100 percent rated load.

o. Perform Test Method 59 Regulator Range Test.

p. Repeat a thru o for any other rated frequency.

q. Repeat a thru p for all other rated line-to-line or line-to-neutral voltages.

64.4 Results.

a. Compute the accuracy for each set instrument at each condition given in paragraph 64.3 above, using the following equation.

$$\text{Accuracy} = \frac{(\text{Set Instrument - Standard}) \times 100}{(\text{Set Instrument Full-Scale Value})}$$

b. Tabulate the results of step a above for each set instrument.

c. Compare these results with the requirements of the contract.

64.5 Contract requirements. The following items must be specified in the individual contract:

a. The accuracy of each set instrument.

b. Standard instrument calibration requirements if different than those required by EGSA 107T.

c. Maximum and minimum voltages between which the generator set shall perform.

d. The maximum allowable regulation.

TEST METHOD 65

INDICATING INSTRUMENT TEST

(PRODUCTION SETS)
(ELECTRICAL)

65.1 General. Accurate set instrumentation is necessary for determination of proper operation of the generator set and to prevent set overload or connected equipment problems.

65.2 Apparatus. Instrumentation for measuring load conditions and ambient temperature shall be as described in EGSA 107T.

65.3 Procedure.

65.3.1 Preparation for test.

a. Connect the load instrumentation for one voltage connection and frequency.

b. Set the mechanical zero if possible on the applicable set instruments. The set instruments may not be readjusted once the test is in progress.

NOTE: During this method the set instruments shall be set at the desired value and the actual value read from the standard instruments.

65.3.2 Test.

a. Start and operate the set at no load and at rated frequency.

b. Record all set and standard instrument readings concurrently for each instrument selector switch position (see figures 65-I and 65-II).

c. Reduce the frequency (if a frequency adjust device is provided) to obtain a set frequency indication at the extreme low end of the instrument's operating range (the lowest major scale division for the frequency condition tested) or to a value just prior to the actuation of the under-frequency protection device (if an under-frequency protection device is provided).

d. Record all set and standard instrument readings concurrently.

e. Increase the frequency to obtain a set frequency indication at the extreme high end of the instrument's operating range (the highest major scale division for the frequency condition tested) or to a value just prior to the actuation of the overspeed protection device.

f. Record all set and standard instrument readings concurrently.

g. Reduce the voltage (if a voltage adjust device is provided) to obtain a panel voltage indication at the extreme low end of the meter operating range (the lowest major scale division for the voltage condition tested) or to a value just prior to the activation of the undervoltage protective device (if an undervoltage protective device is provided).

h. Record all set and standard instrument readings concurrently.

i. Increase the voltage to obtain a set voltage indication at the extreme high end of the meter operating range (the highest major scale division for the voltage condition tested) or to a value just prior to the activation of the overvoltage protective device.

j. Record all set and standard instrument readings concurrently.

k. Repeat a and b except at 25 percent of rated load.

1. Repeat a and b except at 50 percent of rated load.

m. Repeat a and b except at 75 percent of rated load.

n. Repeat a and b except at 100 percent of rated load.

o. Repeat a, b, and n for any other rated frequency.

p. Repeat a, b, n and o for all other rated line-to-line or line-to-neutral voltages.

65.4 Results.

a. Compute the accuracy for each set instrument at each condition given in para 65.3 above, using the following equation:

$$\text{Accuracy} = \frac{(\text{Set Instrument - Standard}) \times 100}{(\text{Set Instrument Full-Scale Value})}$$

b. Tabulate the results of step a above for each set instrument.

c. Compare these results with the requirements of the contract.

65.5 Contract requirements. The following items must be specified in the individual contract:

a. The accuracy of each set instrument.

b. Standard instrument calibration requirements if different than those required by EGSA 107T.

TEST METHOD 66

LOW OIL PRESSURE PROTECTIVE DEVICE TEST

66.1 General. Since generator sets frequently operate unattended for long periods, the engine is usually equipped with a low oil pressure protective device. This device shuts down the engine when the oil pressure drops below the safe limit.

66.2 Apparatus. The following equipment shall be required to perform this test.

Oil pressure gage (±1 percent accuracy)
Flexible oil line (or copper tubing)
Regulating valves
Brass fittings

66.3 Procedure.

663.1 Preparation for test. With the set not operating remove protective device tap from the engine block and reconnect as in figure 66-II with the protective device and oil pressure gage in approximately the same horizontal plane as protective device tap located on the engine.

66.3.2 Test.

a. With the bleeder valve closed and the shut-off valve in the oil pressure line open, start and operate the set at rated speed (use the set instrumentation) and at no load.

b. Open the bleeder valve slightly to purge air from the system.

c. Close the bleeder valve and record the oil pressure as indicated on the external gage.

d. Almost completely close the shut-off valve.

e. Slowly open the bleeder valve until the low oil pressure protective device shuts down the engine. Record the reading of the oil pressure gage at the point of set shutdown.

f. Record operation of the malfunction indicator, if so equipped.

66.4 Results. Compare the value of shutdown pressure with that given in the contract.

66.5 Contract requirements. The following items must be specified in the individual contract:

a. Oil Pressure at which engine must shut down.

b. Low oil pressure malfunction indicator requirements, if applicable.

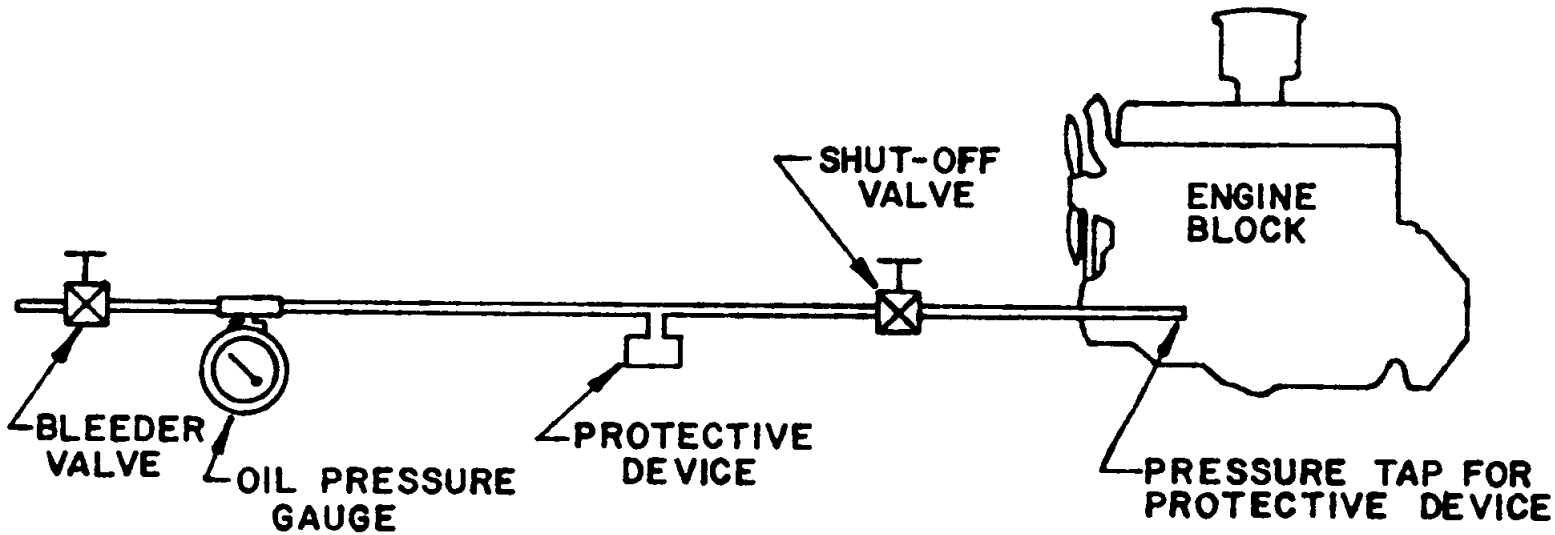

FIGURE 515.1-II. Apparatus hookup for low oil pressure protective device test.

TEST METHOD 67

OVERTEMPERATURE PROTECTIVE DEVICE TEST

67.1 General. The overtemperature device must be capable of protecting the engine in the set against overheating for any reason.

67.2 Apparatus. Instrumentation for measuring load conditions and set and ambient temperatures shall be as described and illustrated in EGSA 107T.

67.3 Procedure.

67.3.1 Preparation for test.

a. Connect the load instrumentation for the applicable voltage connection and frequency.

b. Install a thermocouple to measure the same temperature as seen by the protective device sensor. Record the position of the thermocouple.

67.3.2 Test.

a. Start and operate the generator set at rated voltage, rated frequency (speed), and rated load.

b. Block the cooling air to the generator set by any suitable means.

c. Continuously monitor the temperature seen by the thermocouple installed in paragraph 67.3.1b above. Record the temperature at which the overtemperature protective device actuates (see figure 67-I). Record the temperature at which the warning alarm device actuates, if applicable.

CAUTION: If the engine fails to shut down when the temperature exceeds the maximum trip value specified in the contract, the test shall be immediately discontinued.

d. Record the operation of the malfunction indicator, if applicable.

67.4 Results. Compare the results with the requirements of the contract.

67.5 Contract requirements. The following items must be specified in the individual contract:

a. Range of temperature or maximum temperature in which the overtemperature protective device shall actuate.

b. Overtemperature malfunction indicator requirements, if applicable.

c. Range of temperature in which the warning alarm device shall actuate, if applicable.

TEST METHOD 68

LOW FUEL PROTECTIVE DEVICE TEST

68.1 General. The low fuel protective device is designed to prevent evacuation and loss of prime in the fuel system.

68.2 Apparatus. Load instrumentation (as described in EGSA 107T), a continuity indicating device, and a stopwatch (or similar timing device) shall be required.

68.3 Procedure.

68.3.1 Preparation for test.

a. Connect the load instrumentation for the voltage connection and frequency specified in the contract.

b. Level the generator set.

c. Fill the day tank using the set fuel pump(s) until the fuel valve operates.

d. Disconnect the fuel lines to the set from the set fuel tank and any auxiliary fuel tank(s).

e. Bypass the low fuel protective device.

f. Connect the continuity indicating device across the shut down terminals of the low fuel protective device.

68.3.2 Test.

a. Start and operate the set at rated load, voltage and frequency, simultaneously start the stopwatch (or similar timing device).

b. Note the exact time the low fuel protective device actuates.

c. Continue to operate the generator set at rated load, voltage and frequency until the contract requirements are met.

d. Measure and record the length of the set operating time at rated load prior to the actuation of the low fuel protective device and the length of time the set was allowed to operate at rated load after the actuation of the fuel protective device (see figure68-I).

e. After the engine stops, reconnect the low fuel protective device and record operation of the malfunction indicator, if so equipped (see figure 68-I).

68.4 Results. Compare the times recorded with the minimum times of operation specified in the contract.

68.5 Contract requirements. The following items must be specified in the individual contract:

a. The minimum time of set operation on the day tank before the low fuel protective device actuates, if applicable.

b. The minimum time of set operation after the low fuel protective device actuates.

c. The voltage connection and frequency at which this method is to be performed.

d. The load condition at which this method is to be performed, if other than as specified herein.

e. Low fuel malfunction indicator requirements, if applicable.

METHOD 69

CONTROLS, DIRECTION OF ROTATION

69.1 General. The direction of rotation of the controls must be standard for generator sets to assure proper use by operating personnel.

69.2 Apparatus. Instrumentation for measuring load conditions shall be as described in EGSA 107T.

69.3 Procedure.

69.3.1 Preparation for test. Connect the load instrumentation for one voltage connection and frequency specified in the contract.

69.3.2 Test.

a. Start and operate the generator set at rated voltage, rated frequency, and a load condition specified in the contract with the "unit-parallel" switch in the "unit" position, if applicable.

b. Vary the voltage adjusting control. Record the effect of clockwise rotation on the output voltage (see figure 69-I).

c. Vary the frequency adjusting control. Record the effect of clockwise rotation of the frequency.

d. Vary the frequency droop control, if applicable. Record the effect of clockwise rotation of thecontrol.

e. Vary the cross-current compensating control. Record the effect of clockwise rotation of the control.

f. Repeat steps b thru e above at any other specified load condition.

g. Repeat steps b thru f with the "unit-parallel" switch in the "parallel" position, if applicable.

69.4 Results. Compare the results with the requirements of the contract.

69.5 Contract requirements. The following items must be specified in the individual contract:

a. Direction of rotation of each control and the effect on the set.

b. The voltage connection(s) and frequency(ies) at which this method is to be performed.

c. Load condition(s) at which this method is to be performed.

TEST METHOD 70

REVERSE POWER PROTECTIVE DEVICE TEST

70.1 General. To assure that adequate protection is afforded the generator set from drawing excessive power from a connected "bus", the reverse power protective device must operate properly.

70.2 Apparatus. Instrumentation for measuring load conditions and ambient temperature of the "system" to which the set under test is paralleled shall be as described in EGSA 107T. In addition, a generator set of equal rating as the set under test shall also be required.

70.3 Procedure.

70.3.1 Preparation for test.

a. Connect the load instrumentation for one voltage connection and frequency specified in the requirements document to the set acting as the "bus" (set No. 2) to which the set under test (set No. l) shall be paralleled.

b. Connect the voltage and frequency sensing instruments to the line side of the circuit interrupter of set No. 2 for the same voltage connection and frequency used in step a. above.

c. Connect the output terminals of set No. 2 to the output terminals of set No. 1 with the correct phase relationship (L1-L1; L2-L2; L3-L3; L0-L0).

70.3.2 Test.

a. Start and operate set No. 2 at rated voltage, rated frequency and 75 percent of rated load. Allow the set to operate in this manner for 15 minutes and then record all instrument readings. These readings are the base for the reverse power test.

b. Start and operate set No. 1 at rated voltage, rated frequency, and at no load.

c. Parallel set No. 1 with set No. 2 in accordance with the instructions on the sets or in the technical manuals.

d. Slowly reduce the setting of the frequency adjust device on set No. 1 until the reverse power protective device removes set No. 1 from the "bus" (in this case, set No. 2). Read and record the load instrumentation wattmeter(s) at the point just prior to the actuation of the reverse power protection device.

e. Record the operation of the malfunction indicator, if so equipped.

f. Repeat steps c thru e above two additional times.

g. Repeat 70.3 for each voltage connection and frequency specified in the requirement document.

70.4 Results.

a. Average the wattmeter readings taken during each trial of 70.3.2d above. Subtract the wattmeter reading(s) taken in step a of 70.3.2 above from the average. This value is the reverse power necessary to activate the reverse power protective device.

b. Compare the value(s) obtained in step a above with the requirements of the operation of the reverse power protective device as specified in the contract.

70.5 Contract requirements. The following items must be specified in the individual contract:

a. The maximum allowable reverse power at which the reverse power protective device shall actuate.

b. The voltage connection(s) and frequency(ies) at which this method is to be performed.

c. Reverse power malfunction indicator requirements, if applicable.